ITEM	PART NO.	PART DESCRIPTION	QTY
1	0541231	BASE PLATE	1
2	0406049	PIVOT ARM BRACKET	2
3	0506050	SUPPORT BRACKET LFT	1
4	0506051	SUPPORT BRACKET RT	1
5	0406052	SUPPORT ARM BRKT L	1
6	0406053	SUPPORT ARM BRKT R	1
7	0406054	SUPPORT ARM BRKT M	1
8	0406055	SUPPORT ROD	1
9	0410012	CLAMP ARM	1
10	0346004	1/4-20 HEX BOLT 3/4	16
11	0338100	1/4-20 LOCK NUT	16
12	0346102	5/16-18 HEX BOLT 3/4	10
13	0346104	5/16-18 HEX BOLT 1	3
14	0346106	5/16-18 HEX BOLT 1 1/2	1
15	0338101	5/16-18 LOCK NUT	14
16	0338104	1/2-13 LOCK NUT	2
17	0353104	1/2 FLAT WASHER	1
18	0354012	CASTER	4
19	0310011	HOLD DOWN CLAMP	1
20	0346810	10-32 HEX BOLT 5/8	4
21	0338011	10-32 LOCK NUT	4

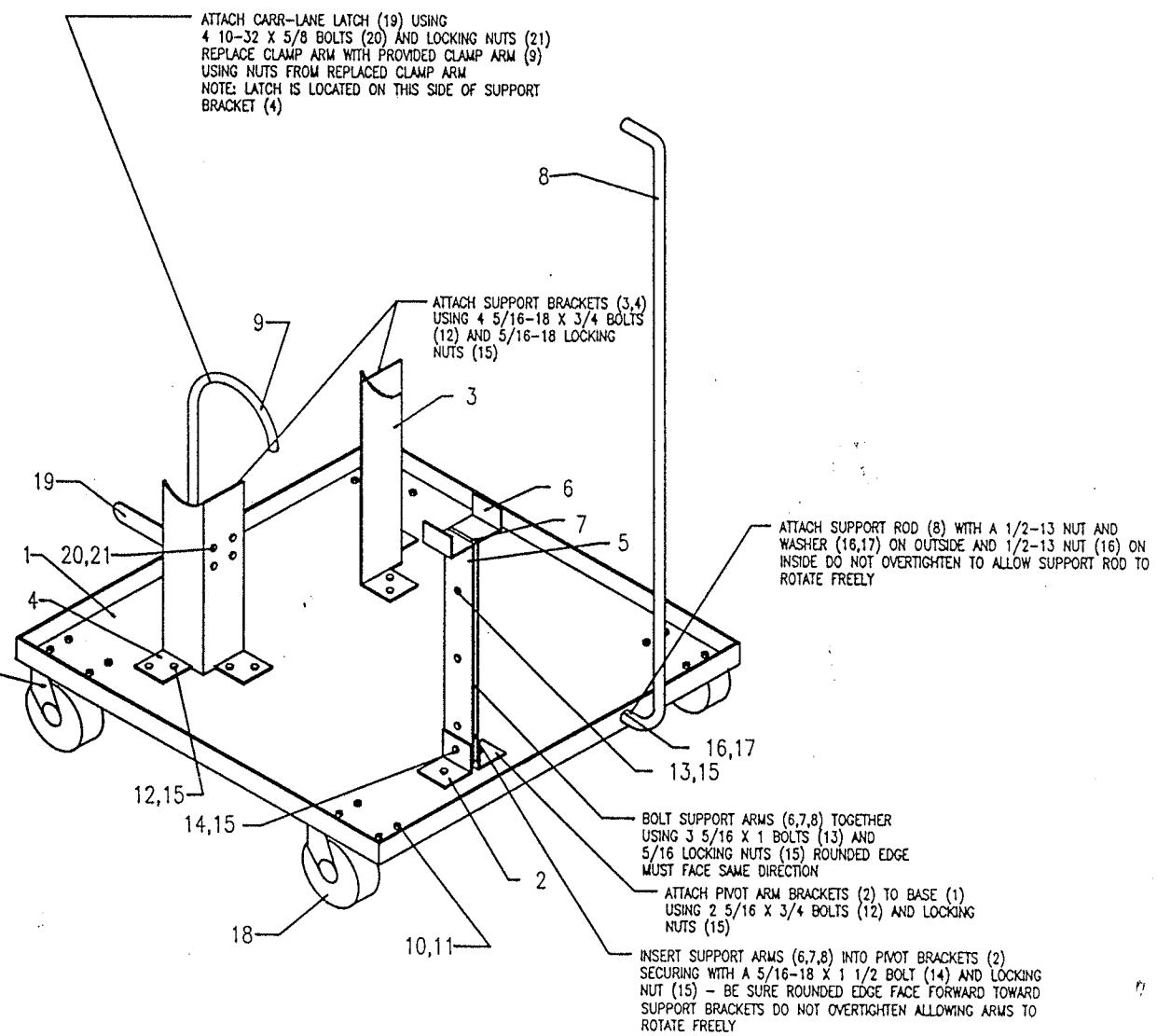

Salsco, INC.
LEADER BY DESIGN

105 SCHOOL HOUSE ROAD
CHESHIRE, CONNECTICUT 06410
PHONE 203-271-1682
FAX 203-271-2596
1-800-8-SALSCO

2/11/91