605
ACCU - SHARP
AUTO-INDEX
SPIN/RELIEF REEL
MOWER GRINDER

ASSEMBLY
AND
SERVICE
MANUAL

WARNING

You must thoroughly read and understand this manual before operating the equipment, paying particular attention to the Warning & Safety instructions.

6057956 (7-08)

SAFETY INSTRUCTIONS

Safety Awareness Symbols are inserted into this manual to alert you to possible ***Safety Hazards***. Whenever you see these symbols, follow their instructions.

The ***Warning Symbol*** identifies special instructions or procedures which, if not correctly followed, could result in personal injury.

The ***Caution Symbol*** identifies special instructions or procedures which, if not strictly observed, could result in damage to or destruction of equipment.

1. **KEEP GUARDS IN PLACE** and in working order.
2. **REMOVE WRENCHES AND OTHER TOOLS.**
3. **KEEP WORK AREA CLEAN.**
4. **DON'T USE IN DANGEROUS ENVIRONMENT.** Don't use Grinder in damp or wet locations, or expose it to rain. Keep work area well lighted.
5. **KEEP ALL VISITORS AWAY.** All visitors should be kept a safe distance from work area.
6. **MAKE WORK AREA CHILD-PROOF** with padlocks or master switches.
7. **DON'T FORCE THE GRINDER.** It will do the job better and safer if used as specified in this manual.
8. **USE THE RIGHT TOOL.** Don't force the Grinder or an attachment to do a job for which it was not designed.
9. **WEAR PROPER APPAREL.** Wear no loose clothing, gloves, neckties, or jewelry which may get caught in moving parts. Nonslip footwear is recommended. Wear protective hair covering to contain long hair.
10. **ALWAYS USE SAFETY GLASSES.**
11. **SECURE YOUR WORK.** Make certain that the cutting unit is securely fastened with the clamps provided before operating.
12. **DON'T OVERREACH.** Keep proper footing and balance at all times.
13. **MAINTAIN GRINDER WITH CARE.** Follow instructions in Service Manual for lubrication and preventive maintenance.
14. **DISCONNECT POWER BEFORE SERVICING,** or when changing the grinding wheel.
15. **REDUCE THE RISK OF UNINTENTIONAL STARTING.** Make sure the switch is OFF before plugging in the Grinder.
16. **USE RECOMMENDED ACCESSORIES.** Consult the manual for recommended accessories. Using improper accessories may cause risk of personal injury.
17. **CHECK DAMAGED PARTS.** A guard or other part that is damaged or will not perform its intended function should be properly repaired or replaced.
18. **NEVER LEAVE GRINDER RUNNING UNATTENDED. TURN POWER OFF.** Do not leave grinder until it comes to a complete stop.
19. **KNOW YOUR EQUIPMENT.** Read this manual carefully. Learn its application and limitations as well as specific potential hazards.
20. **KEEP ALL SAFETY DECALS CLEAN AND LEGIBLE.** If safety decals become damaged or illegible for any reason, replace immediately. Refer to replacement parts illustrations in Service Manual for the proper location and part numbers of safety decals.
21. **DO NOT OPERATE THE GRINDER WHEN UNDER THE** INFLUENCE OF DRUGS, ALCOHOL, OR MEDICATION.

SAFETY INSTRUCTIONS

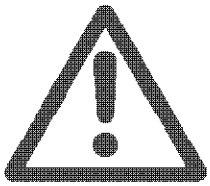

IMPROPER USE OF GRINDING WHEEL MAY CAUSE BREAKAGE AND SERIOUS INJURY.

Grinding is a safe operation if the few basic rules listed below are followed. These rules are based on material contained in the ANSI B7.1 Safety Code for "Use, Care and Protection of Abrasive Wheels". For your safety, we suggest you benefit from the experience of others and carefully follow these rules.

DO

1. **DO** always **HANDLE AND STORE** wheels in a **CAREFUL** manner.
2. **DO VISUALLY INSPECT** all wheels before mounting for possible damage.
3. **DO CHECK MACHINE SPEED** against the established maximum safe operating speed marked on wheel.
4. **DO CHECK MOUNTING FLANGES** for equal and correct diameter.
5. **DO USE MOUNTING BLOTTERS** when supplied with wheels.
6. **DO** be sure **WORK REST** is properly adjusted.
7. **DO** always **USE A SAFETY GUARD COVERING** at least one-half of the grinding wheel.
8. **DO** allow **NEWLY MOUNTED WHEELS** to run at operating speed, with guard in place, for at least one minute before grinding.
9. **DO** always **WEAR SAFETY GLASSES** or some type of eye protection when grinding.

DON'T

1. **DON'T** use a cracked wheel or one that **HAS BEEN DROPPED** or has become damaged.
2. **DON'T FORCE** a wheel onto the machine **OR ALTER** the size of the mounting hole - if wheel won't fit the machine, get one that will.
3. **DON'T** ever **EXCEED MAXIMUM OPERATING SPEED** established for the wheel.
4. **DON'T** use mounting flanges on which the bearing surfaces **ARE NOT CLEAN, FLAT AND FREE OF BURRS.**
5. **DON'T TIGHTEN** the mounting nut excessively.
6. **DON'T** grind on the **SIDE OF THE WHEEL** (see Safety Code B7.2 for exception).
7. **DON'T** start the machine until the **WHEEL GUARD IS IN PLACE.**
8. **DON'T JAM** work into the wheel.
9. **DON'T STAND DIRECTLY IN FRONT** of a grinding wheel whenever a grinder is started.
10. **DON'T FORCE GRINDING** so that motor slows noticeably or work gets hot.

AVOID INHALATION OF DUST generated by grinding and cutting operations. Exposure to dust may cause respiratory ailments. Use approved NIOSH or MSHA respirators, safety glasses or face shields, and protective clothing. Provide adequate ventilation to eliminate dust, or to maintain dust level below the Threshold Limit Value for nuisance dust as classified by OSHA.

SAFETY INSTRUCTIONS

This machine is intended for reel mower reel blade grinding ONLY. Any use other than this may cause personal injury and void the warranty.

To assure the quality and safety of your machine and to maintain the warranty, you MUST use original equipment manufactures replacement parts and have any repair work done by a qualified professional.

ALL operators of this equipment must be thoroughly trained BEFORE operating the equipment.

Do not use compressed air to clean grinding dust from the machine. This dust can cause personal injury as well as damage to the grinder. Machine is for indoor use only. Do not use a power washer to clean the machine.

Low Voltage Relay

The grinder is equipped with a high-low voltage relay which is factory preset at 100-140 VAC. If the power supply line does not deliver 100-140 VAC power under load, the relay will open and trip out the starter. If this occurs, your power supply line is incorrect and must be correct before proceeding further with the grinder.

TABLE OF CONTENTS

Safety Instructions ..... Page 2 - 4
Assembly Instructions ..... Page 5 - 12
Maintenance and Lubrication ..... Page 13 - 16
Adjustments ..... Page 17 - 28
Troubleshooting ..... Page 29 - 47
Electrical ..... Page 30 - 44
Mechanical ..... Page 45 - 47
Parts List ..... Page 48 - 76

SPECIFICATIONS

Electrical Requirements ..... 120 VAC 60/50 HZ, 15 Amp
Net Macine Weight ..... 1290 Lbs. [585 Kg]
Shipping Weight ..... 1530 Lbs. [694 Kg]
Maximum Grinding Length ..... 35 inches [89 cm]

SKILL AND TRAINING REQUIRED FOR SERVICING

This Service Manual is designed for technicians who have the necessary mechanical and electrical knowledge and skills to reliably test and repair the *ACCU*-Sharp Spin/Relief Grinder. For those without the background, service can be arranged through your local distributor.

This Manual presumes that you are already familiar with the normal operation of the Grinder. If not, you should read the Operators Manual, or do the servicing in conjunction with someone who is familiar with its operation.

Persons without the necessary knowledge and skills should not remove the control box cover or attempt any internal troubleshooting, adjustments, or parts replacement.

If you have questions not answered in this manual, please call your distributor. They will contact the manufacturer if necessary.

TORQUE REQUIREMENTS

Throughout this manual we refer to torque requirements as "firmly tighten" or the like. For more specific torque values, refer to the information below.

Bolts Going Into a Nut, or Into a Thread Hole in Steel.
Refer to the table at the right.

Bolts Going Into a Thread Hole In Aluminum
Use the Grade 2 values in the table at the right.

Socket-Head Screws Going Into a Nut or Steel
Use the Grade 8 values in the table at the right.

Machine Screws
No. 6 screws: 11 in.- lbs (0.125kg - m)
No. 8 screws: 20 in. - lbs (0.23 kg - m)
No. 10 screws: 32 in. - lbs (0.37 kg - m)

	GRADE 2	GRADE 5	GRADE 8
	SMOOTH HEAD	3 MARKS on HEAD	6 MARKS on HEAD
1/4 In. thread	6 ft-lbs (0.8 kg-m)	9 ft-lbs (1.25 kg-m)	13 ft-lbs (1.8 kg-m)
5/16 In. thread	11 ft-lbs (1.5 kg-m)	18 ft-lbs (2.5 kg-m)	28 ft-lbs (3.9 kg-m)
3/8 In. thread	19 ft-lbs (2.6 kg-m)	31 ft-lbs (4.3 kg-m)	46 ft-lbs (6.4 kg-m)
7/16 In. thread	30 ft-lbs (4.1 kg-m)	50 ft-lbs (6.9 kg-m)	75 ft-lbs (10.4 kg-m)
1/2 In. thread	45 ft-lbs (6.2 kg-m)	75 ft-lbs (10.4 kg-m)	115 ft-lbs (15.9 kg-m)

ASSEMBLY INSTRUCTIONS

UNPACK CARTONS

Remove the wood board structure and plastic wrap around the unit. The cartons should be opened and assembled in the following sequence:

1. Carton Assembly
2. Setup Gage

Remove the two (2) boxes (carton assembly and set up gauge box) and place aside.

If any problems occur, refer to the shipping and receiving instruction. Double check the cartons for any miscellaneous items or other manuals before disposing of cartons.

UNSTRAP CARRIAGE

Remove the shipping strap which holds the carriage in place. The bolt that holds the shipping strap to the frame can be discarded.

REMOVE GRINDER FROM WOOD PALLET

Remove the grinder base from the wood pallet. This is accomplished by unbolting the bracket that holds each frame side to the bottom of the wood pallet. The four leveling screws are seated in countersunk holes in the wood pallet.

THE UNIT WEIGHS 1290 LBS. [585 KG], USE POWER EQUIPMENT TO LIFT THE UNIT.

POSITION BASE

The ACCU-Sharp will require an operating area about 150" x 108"D x 80"H. The mowing unit will be lifted from behind the machine, and the machine operator will operate the unit from the operator's position on the opposite side of the unit. Position the base to allow sufficient operating room in both front and behind the machine. See FIG. 1.

The base should be placed on a relatively level concrete floor, with ample ceiling height to allow for the installation and operation of the reel winch and boom. Do not place the unit across two concrete slab seams or across a large crack. If the unit must be placed near a wall, we recommend the wall be located as per FIG. 2.

PLACING THE GRINDER ON FLOORING THAT IS BADLY OUT OF LEVEL OR BROKEN WILL AFFECT GRINDING QUALITY.

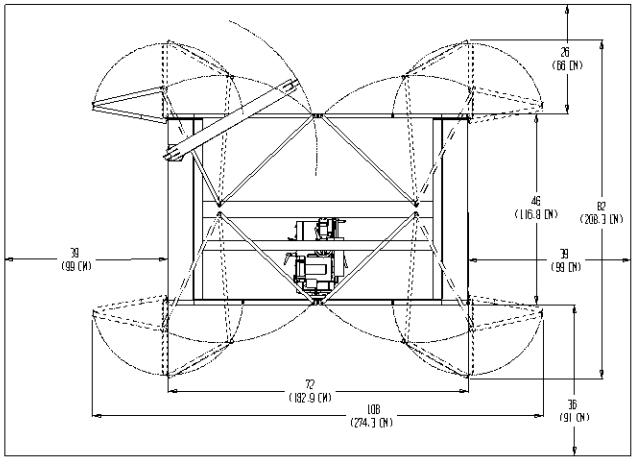

FIG. 1

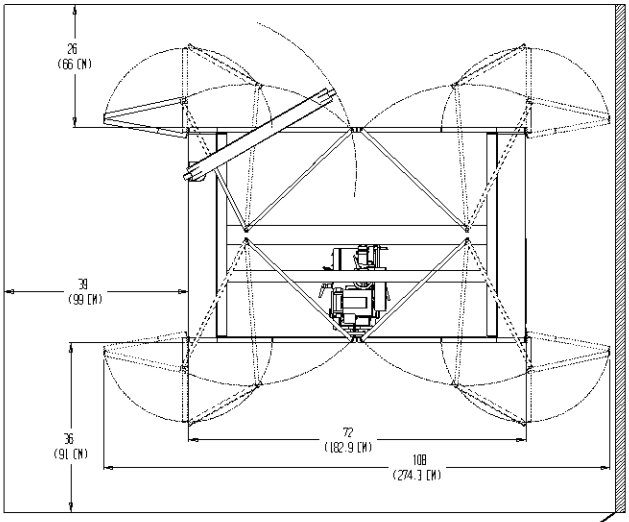

FIG. 2

Remove the carton and remove the contents from the carton onto a workbench. The carton includes:

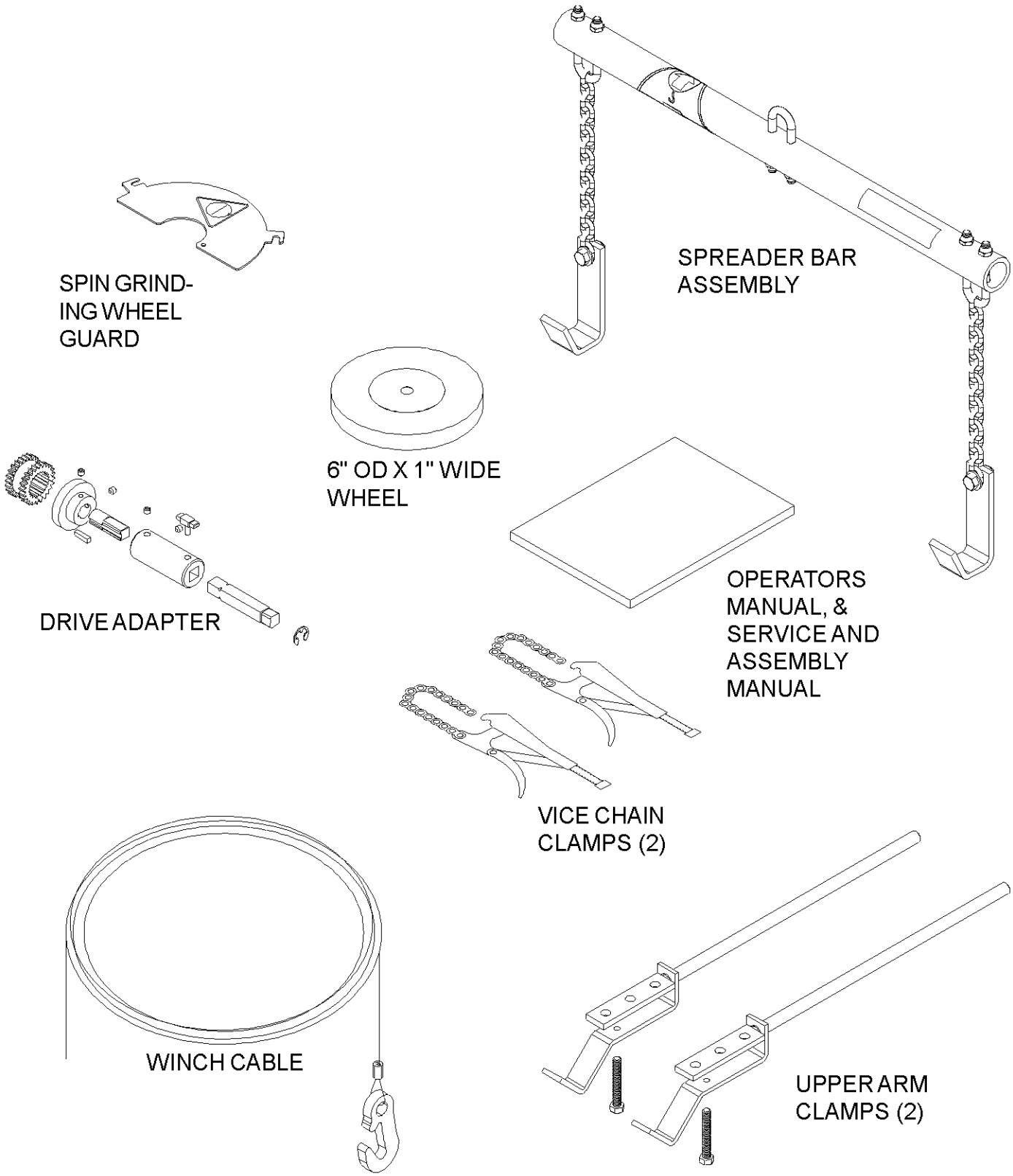

LEVEL BASE

Each leveling foot has been factory preadjusted so it protrudes from the base 1-3/4". See FIG. 3. Raise carriage bellows. See FIG. 4. Place a level on the top of the front carriage rail near one end of the machine and check the levelness of the unit from side to side. See FIG. 5. Adjust the leveling feet as necessary to bring to level.

Raise bellows and place a level across the front and rear carriage rails near the left end of the carriage bed. See FIG. 6. As viewed from the operator's position, adjust the two (2) leveling feet on the left end of the machine as necessary to level the left end. This adjustment is critical to proper operation of your unit.

Raise bellows place a level across the two carriage rails at the right end of the machine and adjust to level. See FIG. 6. This adjustment is critical. These two steps will level the machine from front to back as viewed from the operator's position.

When both front to back and side to side leveling procedures have been completed, thread the hex jam nuts up against the nut that is welded to the bottom of the leg until they lock into place. Be careful not to move the leveling feet during this process. See FIG. 3.

Recheck with level after locking nuts are firmly tightened. Snap the carriage bellows back onto carriage rails.

FAILURE TO PROPERLY LEVEL YOUR GRINDER, OR BUMPING IT, OR KNOCKING IT OFF LEVEL WILL ADVERSELY AFFECT GRIND QUALITY.

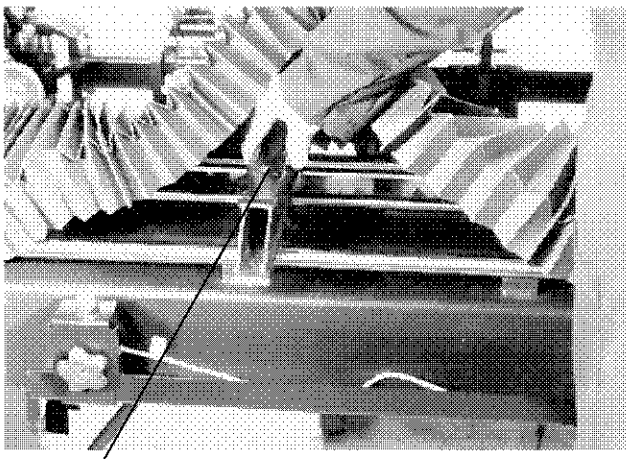

FIG. 6

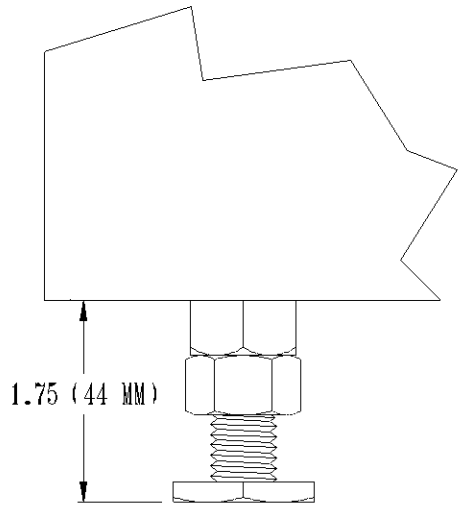

FIG. 3

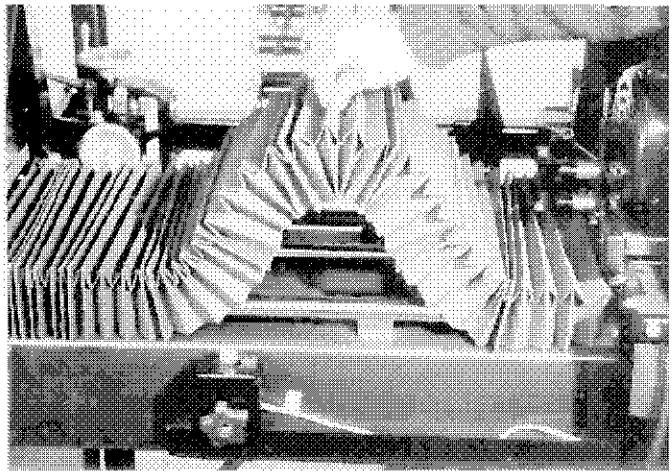

FIG. 4

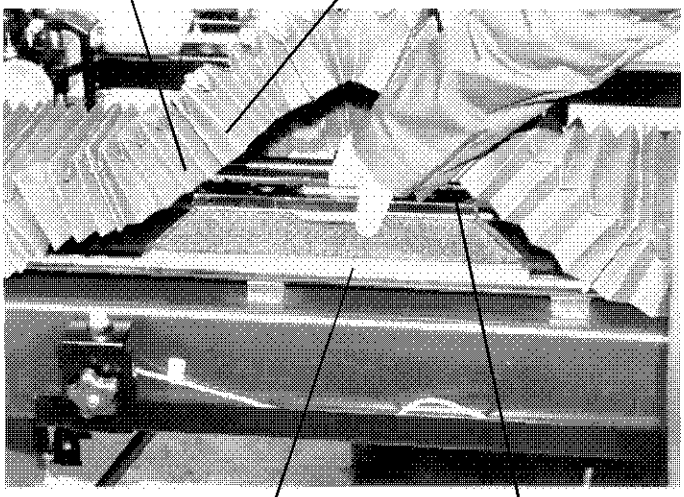

FIG. 5

INSTALL WINCH AND BOOM

With the use of a stool or ladder, install the boom assembly int the boom receiver tube that is welded in the frame. (See FIG. 7)

Thread cable through the hole in the boom arm and over both top pulleys, feed the cable down through the center of the boom vertical tube, and over the lower pulley. Install the cable to the winch per the winch instruction sheet.

The cable is reeled up by rotating handle in a clockwise direction, as it is reeled up it makes a clicking sound. The spring loaded handle actuates a brake when handle is released.

READ SEPARATE DIRECTIONS ON WINCH OPERATION AND MAINTENANCE THAT IS INCLUDED IN THE CARTON ASSEMBLY.

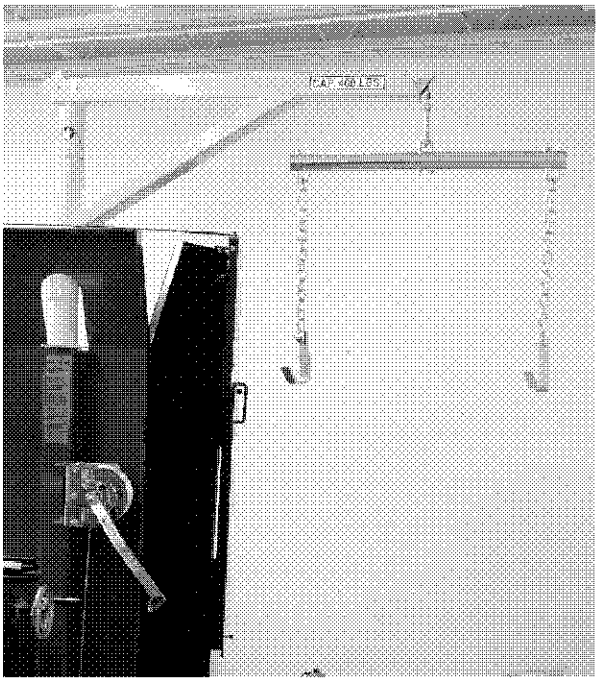

FIG. 7

Place spreader bar with chains and hooks onto cable hook (which has safety latch feature built in). See FIG. 8.

DO NOT OVERLOAD THE WINCH CAPACITY. WINCH CAPACITY IS A MAXIMUM OF 400 LBS.

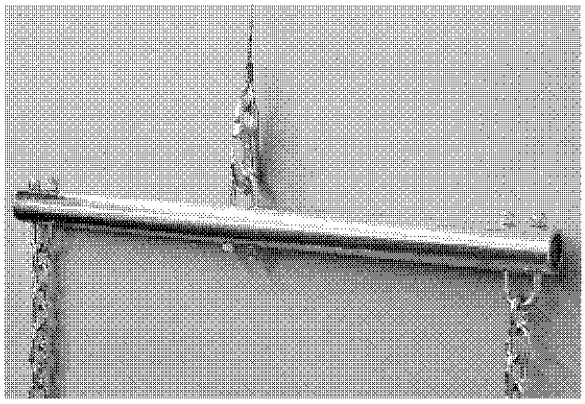

FIG. 8

SET UP GAUGE ASSEMBLY

1. Remove the dial indicator assembly from carton.
2. Remove anvil on dial indicator.
   Mount dial into the casting. Remount anvil. Adjust dial indicator so anvil can be fully depressed without touching the casting and tighten set screw in casting to firmly mount dial indicator to casting.

DO NOT OVERTIGHTEN OR DAMAGE OR MALFUNCTION OF THE DIAL INDICATOR CAN OCCUR.

3. Mount the complete assembly to the machine (See FIG 10 and 11) or store on the tool tray when completed. See FIG. 9.

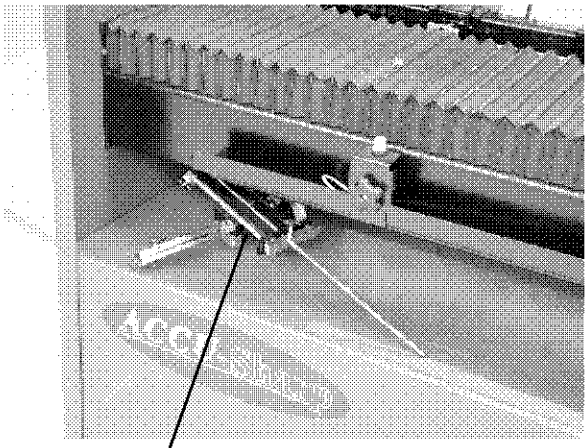

FIG. 9

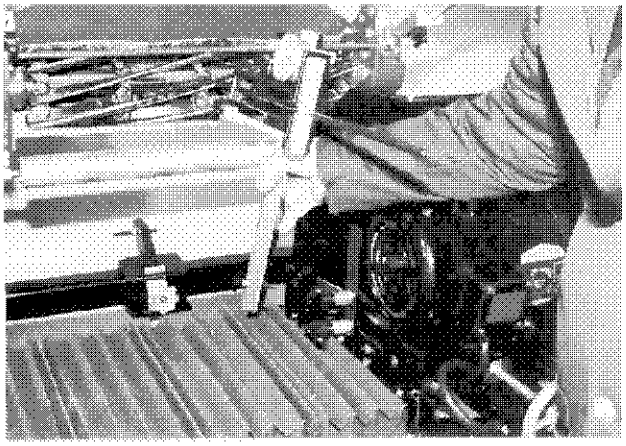

FIG. 10

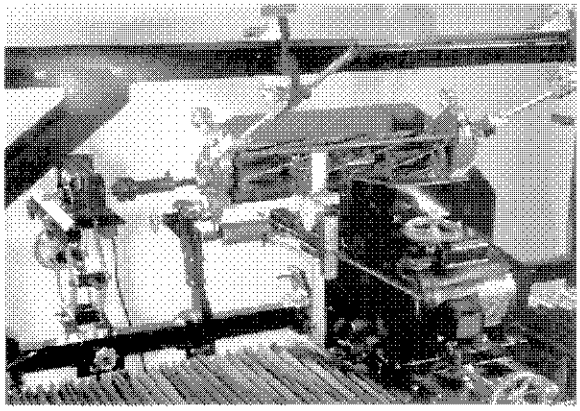

FIG. 11

APPLY POWER

BEFORE YOU APPLY POWER TO THE GRINDER, REFER TO THE "IMPORTANT GROUNDING INSTRUCTIONS" ON PAGE 9.

120 Volt Model Only. Plug the control box power cord into a standard 120V AC 15-amp grounded receptacle. See FIG. 12.

220 Volt Model Only. For 220 Volt Applications order Part No. 6050951, which includes a 220 to 110 Volt Step Down Transformer. See details on page 12.

IT IS RECOMMENDED THAT MODEL 605 GRINDER HAS ITS OWN PERMANENT POWER CONNECTION FROM THE POWER DISTRIBUTION PANEL, WITH NO OTHER MAJOR POWER DRAW EQUIPMENT ON THE SAME LINE.

IT IS REQUIRED THAT THE POWER DELIVERED TO THIS GRINDER IS 120 VAC - 15 AMPS. THE TOLERANCE ON THIS POWER REQUIREMENT IS +/- 5%. THEREFORE THE MINIMUM VOLTAGE REQUIREMENT IS 114 VAC WITH 15 AMPS. VOLTAGE MUST BE CHECKED WITH ALL EQUIPMENT UNDER LOAD (OPERATING) ON THE CIRCUIT.

DO NOT OPERATE THIS GRINDER WITH AN EXTENSION CORD.

DO NOT OPERATE THIS GRINDER ON A GROUND FAULT INTERUPTER (GFI) CIRCUIT. THE (GFI) WILL TRIP CONSTANTLY.

PROPER GROUNDING OF THE RECEPTACLE GROUND IN YOUR BUILDING MUST BE VERIFIED. IMPROPER GROUNDING IN YOUR BUILDING MAY CAUSE THE GRINDER TO MALFUNCTION.

When installing the grinder, the following guidelines should be used to establish the wire size between the power panel in your building and the grinder receptacle. Note that the wiring in your building must be per code between main power panels and sub panels.

FOR 15 AMP RATED LARGE MACHINES

For 0 to 30 Feet from panel to receptacle = Use 14 Ga. Wire.
For 30 to 50 Feet from panel to receptacle = Use 12 Ga. Wire.
For 50 to 80 Feet from panel to receptacle = Use 10 Ga. Wire.
For 80 to 140 Feet from panel to receptacle = Use 8 Ga. Wire.

For 0 to 15 Meters from panel to receptacle = Use 2.5mm Wire.
For 15 to 42 Meters from panel to receptacle = Use 4.0mm Wire.

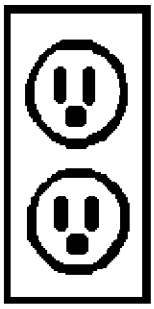

FIG. 12

The grinder is equipped with a high-low voltage relay which is factory preset at 100-140 VAC. If the power supply line does not deliver 100-140 VAC power under load, the relay will open and trip out the starter. If this occurs, your power supply line is incorrect and must be correct before proceeding further with the grinder.

FOR 220-240 V 50 or 60Hz applications Product No. 6050951 should be ordered.

6050951 includes a 2 KVA 220-240 Volt Step Down to 110-120 Volt 50/60 Hz transformer which is prewired.

The wiring diagram is shown in FIG. 13.

The power cord has no connector. A connector which is appropriate for your locality and 220 volt, 8 amp application should be installed.

USE ONLY A QUALIFIED ELECTRICIAN TO COMPLETE THE INSTALLATION.

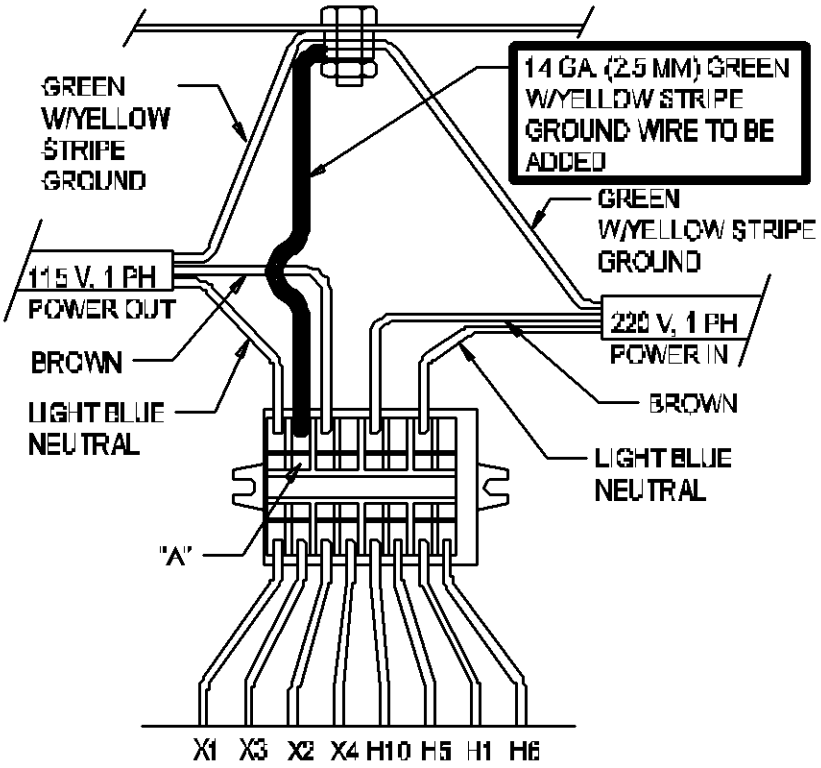

INDIVIDUALLY WIRE NUT TRANSFORMER LEADS H2, H3, H4, H7, H8 AND H9

INSTALL THE GREEN W/YELLOW STRIPE WIRE SUPPLIED INTO THE TERMINAL BLOCK IN THE HOLE OPPOSITE WIRE X3 AS SHOWN. TO INSTALL THE WIRE INSERT A SMALL SCREWDRIVER INTO THE CAVITY MARKED "A" TO OPEN THE WIRE HOLE.

ATTACH THE OTHER END OF THE GREEN W/YELLOW STRIPE WIRE SUPPLIED TO THE GROUND STUD ON THE TRANSFORMER.

FIG. 13

IMPORTANT GROUNDING INSTRUCTIONS

In case of a malfunction of breakdown, grounding reduces the risk of electrical shock by providing a path of least resistance for electrical current.

This Grinder has an electrical cord with an equipment grounding conductor and a grounding plug. The plug must be plugged into a matching outlet that is properly installed and grounded according to all local or other appropriate electrical codes and ordinances.

Before plugging in the Grinder, make sure it will be connected to a supply circuit protected by a properly-sized circuit breaker or fuse. SEE SERIAL NUMBER PLATE FOR FULL LOAD AMP RATING OF YOUR MACHINE.

Never modify the plug provided with the machine--if it won't fit the outlet, have a proper outlet and circuit installed by a qualified electrician.

ALWAYS PROVIDE A PROPER ELECTRICAL GROUND FOR YOUR MACHINE. AN IMPROPER CONNECTION CAN CAUSE A DANGEROUS ELECTRICAL SHOCK. IF YOU ARE UNSURE OF THE PROPER ELECTRICAL GROUNDING PROCEDURE, CONTACT A QUALIFIED ELECTRICIAN.

CLEANING AND MAINTENANCE GUIDELINES FOR POLYCARBONATE WINDOWS

Cleaning Instructions

DO NOT USE GASOLINE
Adherence to regular and proper cleaning procedures is recommended to preserve appearance and performance.

Washing to Minimize Scratching

Wash polycarbonate windows with a mild dish washing liquid detergent and lukewarm water, using a clean soft sponge or a soft cloth. Rinse well with clean water. Dry thoroughly with a moist cellulose sponge to prevent water spots. Do not scrub or use brushes on these windows. Also, do not use butyl cellosolve in direct sunlight.

Fresh paint splashes and grease can be removed easily before drying by rubbing lightly with a good grade of VM&P naphtha or isopropyl alcohol. Afterward, a warm final wash should be made, using a mild dish washing liquid detergent solution and ending with a thorough rinsing with clean water.

Minimizing Hairline Scratches

Scratches and minor abrasions can be minimized by using a mild automobile polish. Three such products that tend to polish and fill scratches are Johnson paste Wax, Novus Plastic Polish #1 and #2, and Mirror Glaze plastic polish (M.G. M10). It is suggested that a test be made on a corner of the polycarbonate window with the product selected following the polish manufacturer's instructions.

Some Important "DON'TS"

- **DO NOT** use abrasive or highly alkaline cleaners on the polycarbonate windows.
- **Never** scrape polycarbonate windows with squeegees, razor blades or other sharp instruments.
- Benzene, gasoline, acetone or carbon tetrachloride should **NEVER** be used on polycarbonate windows.
- **DO NOT** clean polycarbonate windows in hot sun or at elevated temperatures.

Graffiti Removal

- Butyl cellosolve, (for removal of paints, marking pen inks, lipstick, etc.)
- The use of masking tape, adhesive tape or lint removal tools works well for lifting off old weathered paints.
- To remove labels, stickers, etc., the use of kerosene, VM&P naphtha or petroleum spirits is generally effective. When the solvent will not penetrate sticker material, apply heat (hair dryer) to soften the adhesive and promote removal.

  GASOLINE SHOULD NOT BE USED!

MAINTENANCE & LUBRICATION

DAILY MAINTENANCE IS SPECIFIED ON PAGE 7 OF THE OPERATOR'S MANUAL, AND IS TO BE PERFORMED BY THE OPERATOR. LISTED BELOW ARE PERIODIC MAINTENANCE ITEMS TO BE PERFORMED BY YOUR COMPANY'S MAINTENANCE DEPARTMENT:

1. Check gib plate adjustment in the grinder carriage base monthly. See Troubleshooting Section for adjustment. Lubricate the gib area with high quality litium grease every six months. Wipe off excess grease.
2. Wipe and re-oil with spray lubricant, the grinding wheel infeed adjusting lead screw and the grinding head height adjustment lead screw every three months. Wipe off all excess lubricant.
3. Inspect the V-belt for glasing or cracking and adjust the belt tension per procedure specified in the adjustment section every three months.
4. Wipe off and relube with never-seez, the vertical and horizontal cross slide shafts and lead screws, every six months.
5. Lift the bellows, (See FIG. 26) and wipe off the traverse bearing rails monthly. Follow the lubrication procedure linear bearings. Generally, this will be every six months to a year.
6. Check the brushes on the auto traverse drive motor and spin motor once a year. Replace as necessary. See Troubleshooting Section.
3. Check the free play in the grinding wheel shaft bearing once a year. Replace if excessive play exists.

LUBRICATION OF LINEAR BEARINGS

STEP 1--Thoroughly clean the shafts.

STEP 2--Flood spray the two shafts with a spray lubricant **(do not use a teflon based lubricant)** until the lubricant is dripping off the shafts. See FIG. 15 Then run the carriage back and forth through its range of travel. This will carry the lubricant into the bearings.

STEP 3--With a clean rag, wipe off the excess amount of lubricant from the shafts. Run the carriage back and forth through its range of travel and wipe the shafts after each traverse. Repeat until the shafts are dry to the feel. This completes the lubrication process.

If the unit will be shut down for an extended period of time, more than four weeks, then the shafts and other appropriate parts of the unit should be flooded with lubricant and that lubricant left in place until the unit is brought back into service. When the unit is brought back into service the full lubrication procedure as stated above should be repeated.

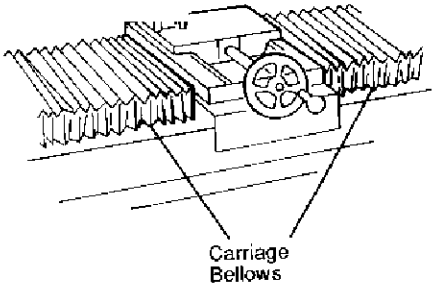

FIG. 14

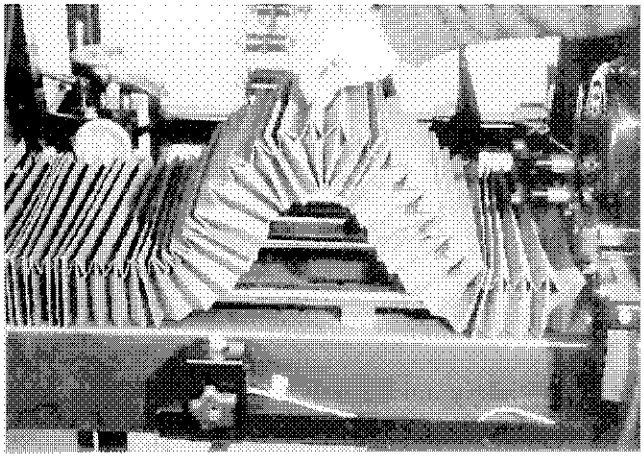

FIG. 15

LUBRICATION FREQUENCY

The lubrication frequency is to check the shaft monthly during grinder operation.

If the unit will be shut down for an extended period of time, more than two weeks, then the shafts and other appropriate parts of the unit should be flooded with lubricant and that lubricant left in place until the unit is brought back into service. When the unit is brought back into service the full lubrication procedure as stated above should be repeated.

STORAGE PROCEDURE

It is important to follow the procedures below when placing your grinding in storage for an extended period of time. Proper care will help maintain the working functions of the grinder and decrease maintenance and problems that occur when storing the grinder.

BEFORE STORING THE GRINDER:

-Clean the machine thoroughly. (Do not use compressed air or a power washer to clean this machine!) See Maintenance section for instructions on cleaning polycarbonate.

-Lubricate the following parts by flooding the area with a spray lubricant and leaving it in place: (Do not use a Teflon based lubricant)

Traverse shafts, linear bearings (see Lubrication section of manual)
Remove grinding wheel and spray the movable parts of the finger system
Cross slide shafts and adjustment screws (Right side of Traverse Base)
Scratches in the paint or any other bare metal surfaces

-Work the lubricant in by moving parts through their full range of motion.

-Make sure all controls are in the off position and unplug the unit from the wall. Turn off the digital alignment gage.

-Cover the unit if possible with a sheet or tarp.

BRINGING THE UNIT BACK INTO SERVICE:

-Remove the cover and reapply lubricant to the items stated above. Wipe off all excess lubricant. (See Lubrication section for more details.)

-Plug the unit into the wall and test all electrical functions.

-Check the belt for cracking and adjust the tension if necessary.

-Check for damaged or missing parts.

TO REPLACE THE CARRIAGE LINEAR BEARINGS

1. Remove the carriage bellows from the carriage and the machine frame.
2. Remove the three linear bearing pillow blocks (four screws each) from the bottom of the carriage one at a time, slide the removed linear bearing off the end of the traverse shaft and discard them.
3. One at a time, slide the new linear bearing pillow blocks onto a carriage rail.
4. Adjust the tension screw (FIG. 16) on the side of each bearing block so that when you radially rotate the pillow block around the carriage (See FIG. 17) rail there is no free play between the bearing and rail. You should feel a strong drag.
5. When the bearing is adjusted correctly, reinstall the bearing and proceed to do the same with the other two bearings until all have been replaced.

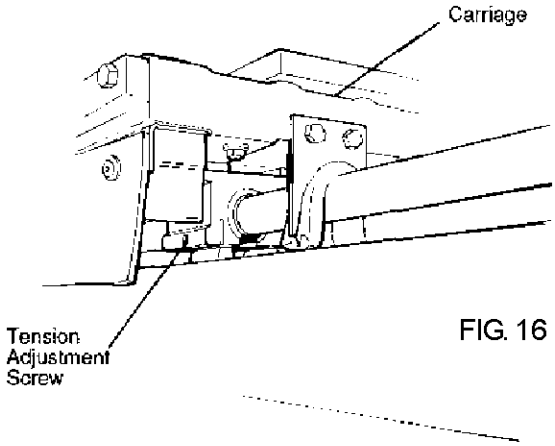

FIG. 16

NOTE: The tension is too tight if you feel a cogging action when you rotate a pillow block around the rail. This cogging is caused by the bearing skidding on the rail. Rocking the bearing block back and forth should be a smooth uniform motion.

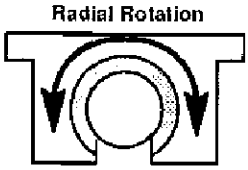

FIG. 17

BEARINGS WHICH ARE TOO TIGHT OR TOO LOOSE WILL CAUSE POOR GRINDING QUALITY. BEARINGS WHICH ARE TOO TIGHT WILL ALSO HAVE A MUCH SHORTER LIFE, AND COULD DAMAGE THE RAIL.

6. Recheck the bearing tension. The tension is correct when you try to lift the carriage and can feel no free carriage movement up or down. Check for excessive carriage-traverse load by using a spring scale to pull on the carriage parallel to the drive shaft (as in FIG. 18). There should be only about a 3 to 5 lbs pulling force.

   To double-check, manually slide the carriage assembly from one end of its travel to the other. There should be uniform resistance through the full range of travel.
7. Reattach the two carriage bellows. Refer to the assembly section of this manual.

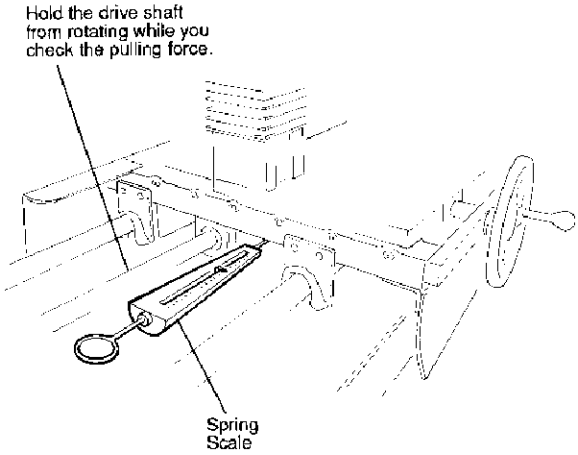

FIG. 18

SPIN GRINDING ATTACHMENT ADJUSTMENT

If play develops so crank handle wants to rotate in the scissor action on the spin grinding attachment, the play can be eliminated by tightening the set screw identified in FIG. 19.

If there is too much play in the spin drive pivot points, torque down the hex nut tight so conical washer is completely compressed, then back off 1/2 turn. See FIG. 19.

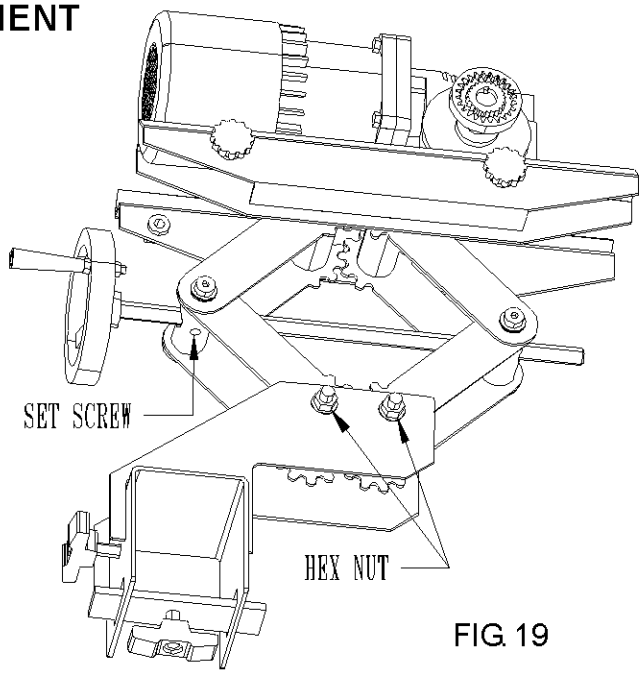

FIG. 19

TO ADJUST THE CARRIAGE GIB PLATE

The gib plate must be readjusted occasionally to eliminate free play. Otherwise, the grinding head can move from side to side, and the reel may be ground unevenly.

The gib must allow the carriage to be cranked freely forward and back without any side play. See FIG. 20.

To adjust:

1. Crank the carriage all the way forward (toward the operator position).
2. Tighten the front gib screw until the carriage has no side play but the horizontal handwheel can still be cranked.
3. Crank the carriage gradually back (away from the operator position), and adjust the remaining gib screws as you go.

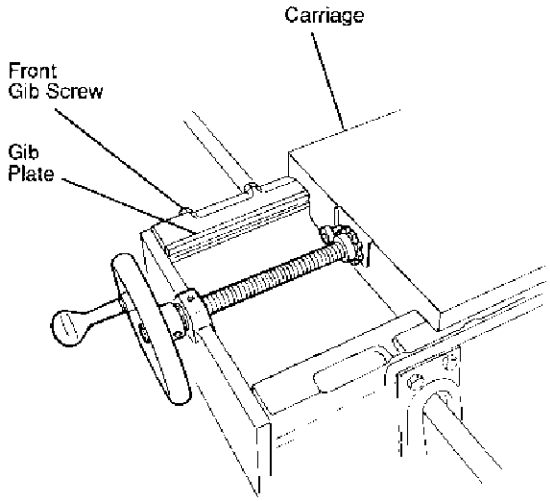

FIG. 20

ADJUSTABLE FINGER BACKSTOP TENSION

If the relief backstop appears to vary during relief grinding, adjust the tension on the nylon plug and set screw. See FIG. 21.

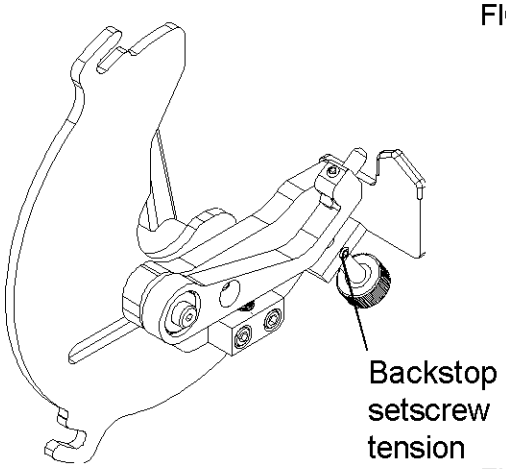

FIG. 21

CROSS SLIDE SHAFT REPLACEMENT

If the cross slide shafts become scarred or gnarled, replace them by the following procedure:

STEP 1--Loosen the two nuts on the support casting that hold the dutchman and tap with plastic hammer to loosen.
STEP 2--Loosen the locking handles and tap the center stud with a plastic hammer.
STEP 3--Loosen locknut and setscrew and remove the handlwheel.
STEP 4--Remove the Slide Shaft.
STEP 5--Remove all burrs and resurface the shaft to a clean, smooth, polished surface. (OR REPLACE WITH A NEW SHAFT.)
STEP 6--Coat shaft with Never-Cease and re-install the shaft through the Support, Cross Slide Block and the three Dutchman. The shaft must move freely inside the Cross Slide Block before reassembling.
STEP 7--Retightening the nuts at the end of the Dutchman to lock shaft in place.
STEP 8--Reinstall the Handwheel by snuging the setscrew to the flat located on the screw shaft, then torque nut until tight and back off 1/2 turn. Torque the setscrew to 70 in-lbs.
STEP 9--Test the Cross Slide, the handwheel should turn freely.

NOTE: It is also possible to remove the complete Cross Slide Assembly and do the repairs on a bench then reinstall.

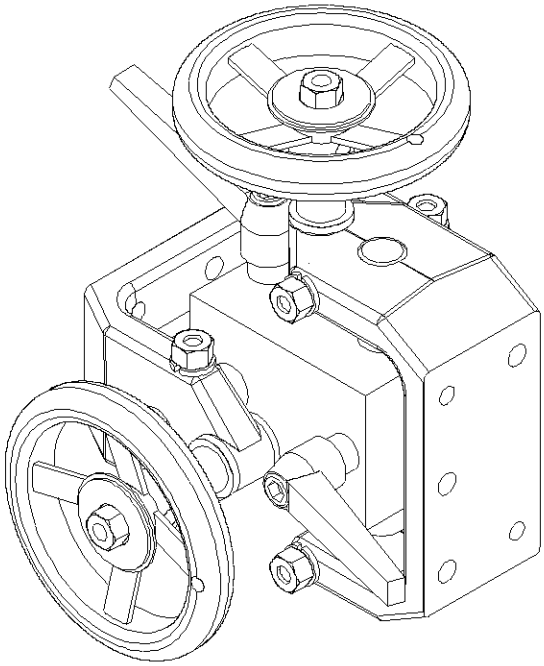

FIG. 22

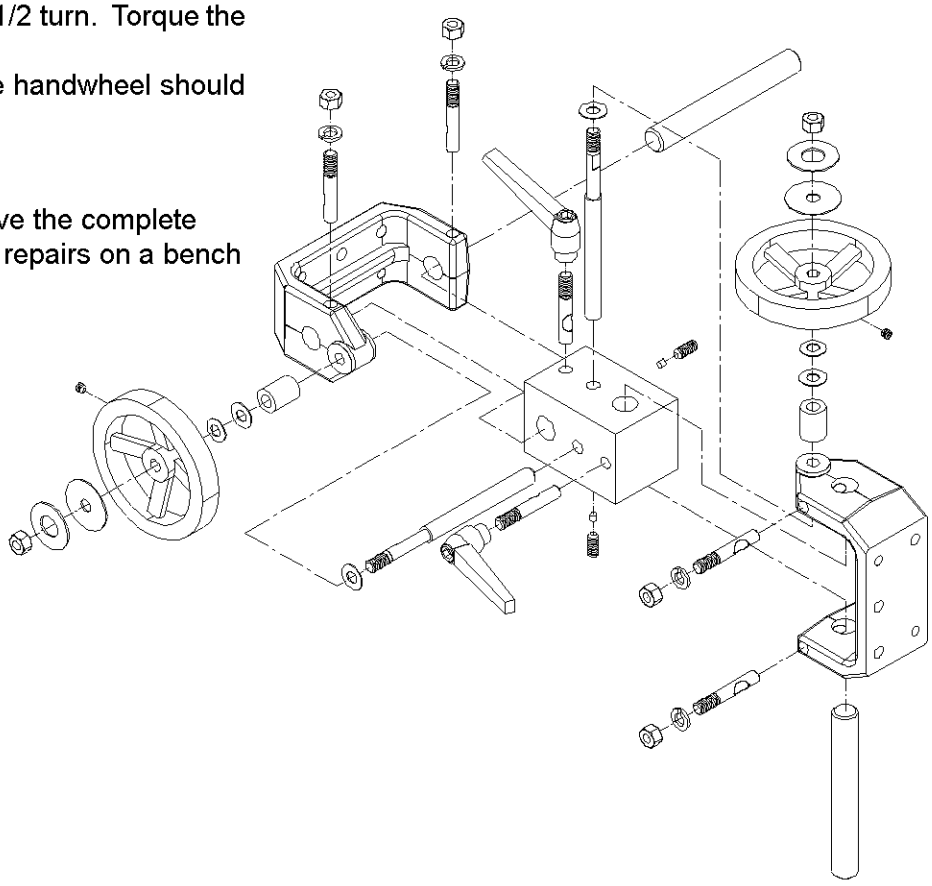

TRAVERSE BELT TENSION

To adjust the tension on the traverse belt tighten the screws and nuts located at the left side of the traverse belt. Tighten nuts until the comprension springs measure 3/4". See FIG. 23. If the springs are not tensioned equally, uneven loading on the traverse system may cause parts to fail.

DO NOT OVERTIGHTEN. OVERTIGHTENING COULD DAMAGE THE BELT OR TRAVERSE DRIVE SYSTEM.

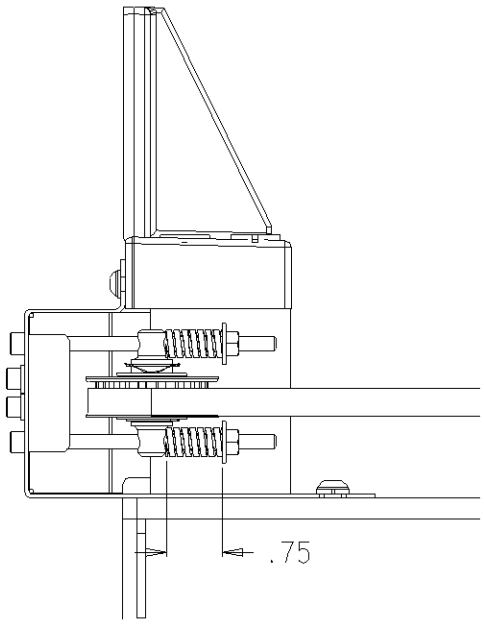

FIG. 23

TRAVERSE CLAMP FORCE

If the traverse clamp is slipping during regular operation it may be necessary to tighten the clamp. To tighten, loosen the jam nut on the clamp tip. Screw the tip out so there is .10" gap between the tip and the Clamp Support Block. See FIG 24. Lock in place by tightening the jam nut against the clamp being careful not to move the tip. Verify the distance between the clamp tip and block is still .10". The .10" setting allows slippage in a jam situation and damage can occur if this adjustment is set to narrow.

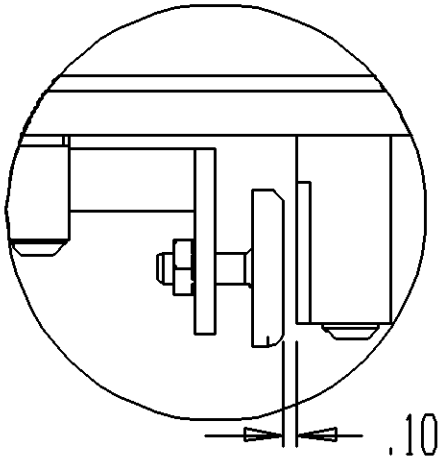

FIG. 24

CAUTION SHOULD BE USED AS ADJUSTING THE TIP WILL AFFECT THE SLIP LOAD AND COULD DAMAGE THE CLAMP TIP, BELT OR TRAVERSE DRIVE SYSTEM.

POTENTIOMETER ADJUSTMENTS TRAVERSE DRIVE CONTROL (TDC)

Min. Speed--Factory set at full (CCW) 8:30. Do not change this setting.

(Right Traverse) Forward Torque--Factory set at full (CW) 4:30. Do not change this setting.
(Left Traverse) Reverse Torque--Factory set at full (CW) 4:30. Do not change this setting.

IR COMP--Factory set to 9:00. IR COMP is current (I) resistance (R) compensation (COMP).
IR COMP adjusts the output voltage of the drive which balances load to motor RPM. Regulation of a traverse motor may be improved by slight adjustment of the IR COMP trim pot clockwise from its factory-set position. Overcompensation causes the motor to oscillate or to increase speed when fully loaded. If you reach such a point, turn the IR COMP trim pot counterclockwise until the symptoms disappear.

Max. Speed--Set at 3:30 for maximum voltage of 90 Volts DC to the traverse motor. When voltage is above 90 volts DC, the traverse motor will start to pulsate and not run smoothly.

(Right Traverse) Forward Acceleration--Factory set at full (CCW) 8:30. Do not change this setting.
(Left Traverse) Reverse Acceleration--Factory set at full (CCW) 8:30. Do not change this setting.

(DB) Dead Band is the potentiometer setting for the 50 or 60 Hz cycle control. Factory set to 9:00, works for both 50 and 60 Hz. Do not change this setting.

Calibrating the **DWELL TIME** rotary DIP switch adjusts the amount of time the process remains in the stop position after a limit switch is actuated. The **DWELL TIME** range is adjustable from 0 - 4 seconds. A DIP switch setting of 0 sets the **DWELL TIME** to 0 seconds, while a setting of 8 sets the **DWELL TIME** to 4 seconds. Dwell time is preset to #4 setting for a 2 second dwell time when reversing at each end of stroke.

Diagnostic LED's indicate the function that is currently being performed:

* **POWER indicates that ac power is being applied to the control.**
* **FORWARD indicates that the process is running in the forward direction (traversing left).**
* **REVERSE indicates that the process is running in the reverse direction (traversing right).**
* **PROX 1 FWD LIMIT lights when the forward limit switch is actuated (left prox).**
* **PROX 2 REV LIMIT lights when the reverse limit switch is actuated (right prox).**
* **DWELL lights when the process remains stopped after a proximity switch is actuated.**

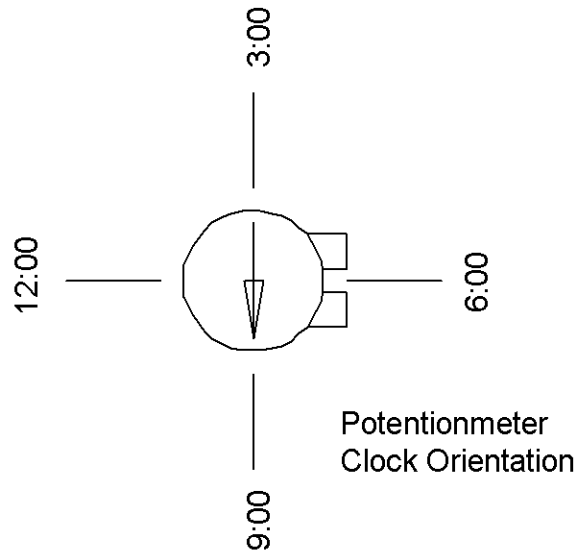

Potentionmeter
Clock Orientation

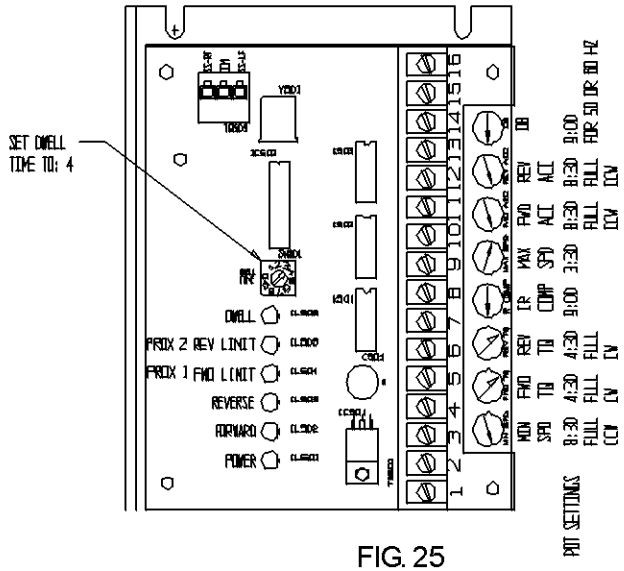

FIG. 25

SPIN DRIVE CONTROL BOARD (SDC)

The Spin Drive Control Board has three potentiometers on the lower board and two potentiometers on the upper board as shown on FIG. 26 and FIG. 27. These potentiometers have been set at the factory to the positions shown on FIG. 26 and FIG. 27.

In the Relief Grinding Mode--
The remote Relief Speed Pot (RSP) and the Relief Torque Pot (RTP) interact with each other. The (RSP) is located on the upper spin board as a remote speed preset at 9:30. See FIG. 26. The (RTP) is located on the control panel and is for relief torque adjustment.

Remote Relief Speed Pot (RSP) when rotated clockwise will increase maximum spin drive speed when in the relief mode. This speed should never be above the 10:30 setting.

Relief Torque Pot (RTP) can vary the reel to finger holding torque for relief grinding. The recommended starting point is 30 in/lbs of torque setting. Never adjust the (RTP) potentiometer dial past the red line marking. Setting the reel to finger torque to high could cause the traverse motor system to not operate smoothly.

In the Spin Grinding Mode--
the Spin Torque Potentiometer (STP) and the Spin Speed Pot (SSP) interact with each other. The (STP) is located on the upper spin board as remote torque preset at 2:00 for torque setting. See FIG. 26. The (SSP) is located on the control panel and is for spin speed adjustment.

Spin Torque Pot (STP) controls maximum torque allowable in the spin grinding cycle only. This should never be adjusted past the 2:30 position. If the reel does not turn check that the reel is free turning by hand spinning.
The Spin speed Pot (SSP) controls reel spin speed, adjust as required. This controls the spin drive speed for spinning the reel.

POTENTIOMETERS ON THE LOWER BOARD OF THE SPIN DRIVE CONTROL (SDC)
See FIG. 27.

Maximum Speed Pot--
The maximum speed is factory preset to 4:30 (fully clockwise) to allow for maximum spin speed.

Minimum Speed Pot--
The minimum speed is factory preset at 8:30 (full counterclockwise) so zero speed is obtainable for spin speed.

IR Compensation Pot--
The IR Compensation is factory set at 9:00.

Regulation of the spin or relief grind spin motor may be improved by a slight adjustment of the IR COMP pot clockwise from its factory-set position. Overcompensation causes the motor to oscillate or to increase speed when fully loaded. If you reach such a point, turn the IR COMP pot counterclockwise until symptoms just disappear.

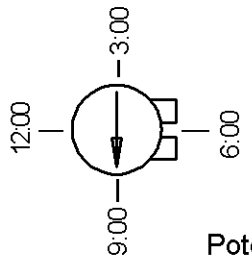

Potentiometer
Clock Orientation

FIG. 28

UPPER SPIN BOARD

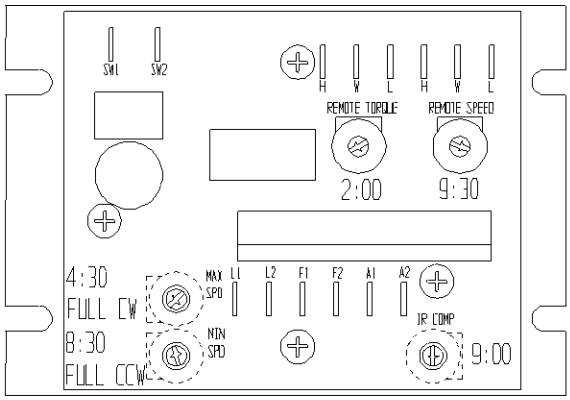

FIG. 26

LOWER SPIN BOARD

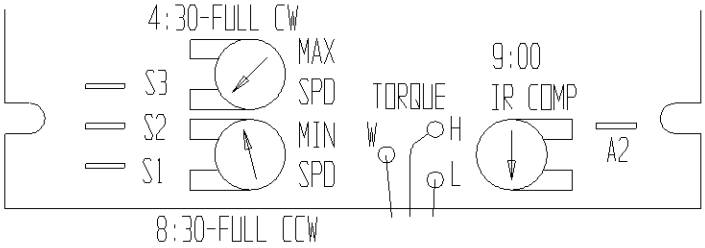

FIG. 27

PROXIMITY SWITCH

For the proximity switch to perform properly and reverse the direction of the carriage at each end of the rails, a distance of 4 mm [.156"] to 6 mm [.234"] needs to be maintained between the proximity sensing bracket and the proximity switch. See FIG. 30.

NOTE: Light on proximity activates when metal crosses over the switch.

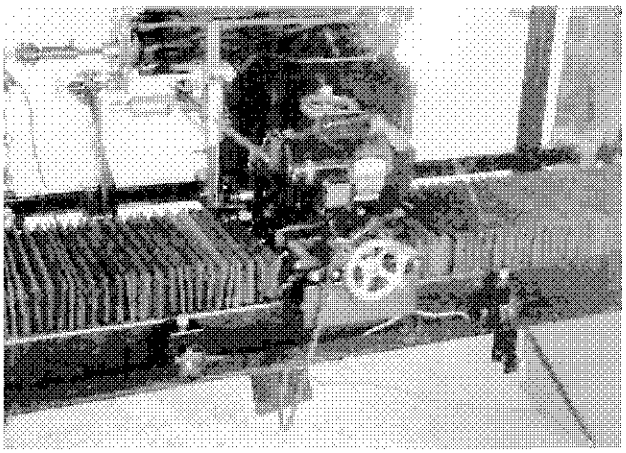

FIG. 29

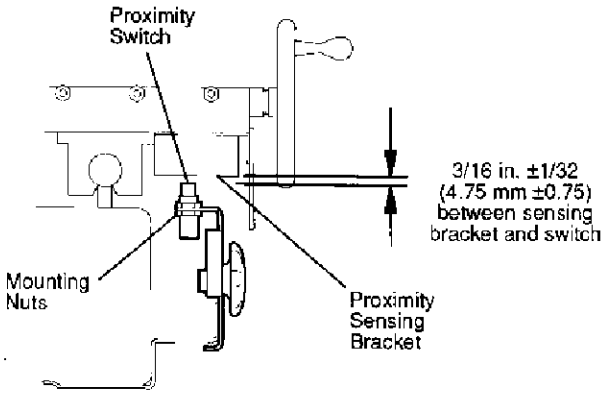

FIG. 30

ALIGNMENT FIXTURE ADJUSTMENT

The body of the dial indicator should be flush with the casting it is mounted in. The anvil should be able to be depressed fully without touching the casting. To adjust properly, loosen the set screw in the indicator mounting casting and adjust accordingly. See FIG. 31.

Tighten dial indicator set screw enough to lightly hold the indicator in place. Never overtighten so plunger does not have free travel.

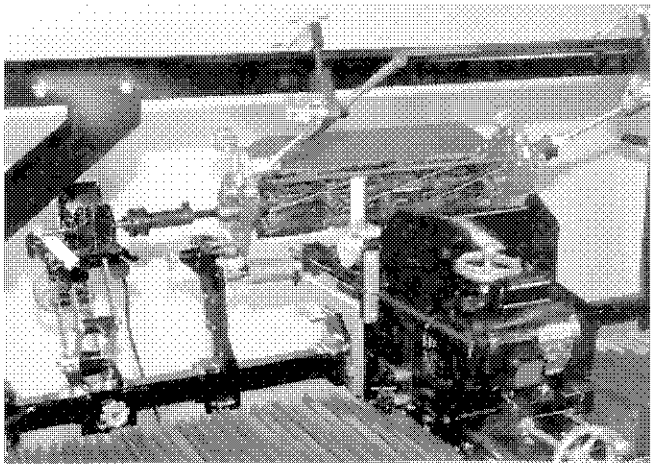

FIG. 38

SET UP GAUGE ADJUSTMENT

There should be no backlash in the fine adjustment screw on the set up gauge slide. See FIG. 32. Adjust hex nut tight so conical washer is completely pressed then back off 1/2 turn.

Make sure the set screw is compressing the nylon plug tightly on the vertical adjusting screw.

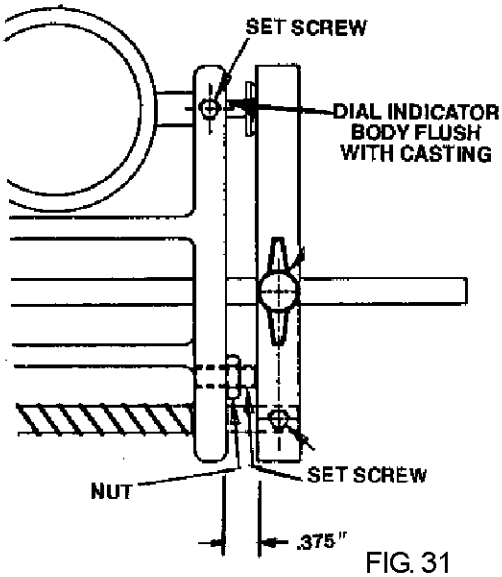

FIG. 31

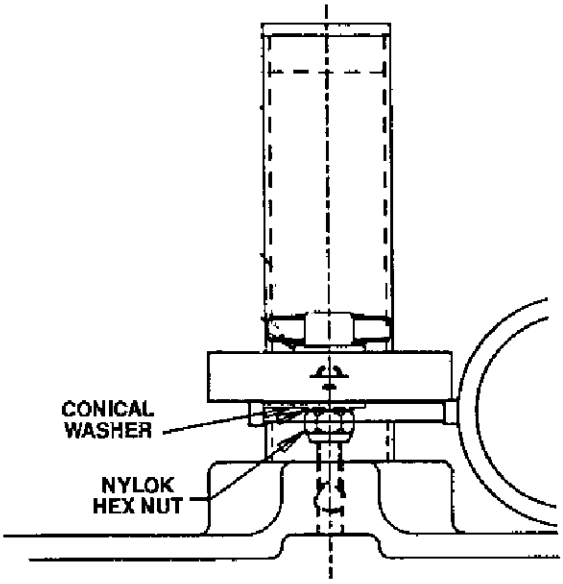

FIG. 32

TO ELIMINATE CARRIAGE INFEED BACKLASH

If there is backlash in the carriage infeed handwheel (See FIG. 33), there are two adjusting points to check:

1. Conical washers behind the shaft adjusting nut:
   A. Unscrew the shoulder bolt.
   B. Hold the horizontal handwheel, and turn the shaft adjusting nut counterclockwise until the conical washers are touching each other. Continue turning the nut counterclockwise until the next notch is centered over the shoulder-bolt hole. Then turn the nut one notch (40 degrees) further.
   C. Reinstall the shoulder bolt to lock the nut in position.

2. Washers behind the handwheel:
   A. Loosen (about one-half turn) the set screw holding the handwheel to the shaft.
   B. Tighten the hex nut which secures the handwheel to 100 in.-lbs [1.15 kg-m), then back it off 1/2 turn.
   C. Check for .015 in [.4 mm] gap between the wave washer and flat washer. See insert to FIG. 34. Reajust the hex nut if necessary.
   D. Tighten the set screw holding the handwheel to the shaft.

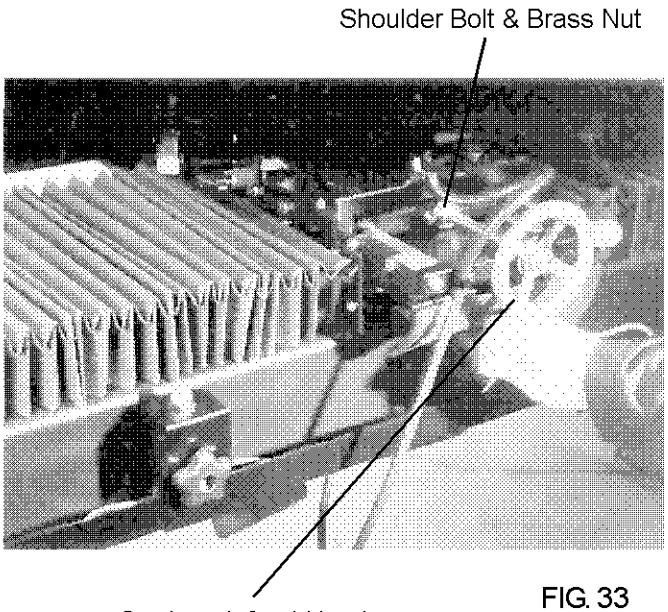

FIG. 33

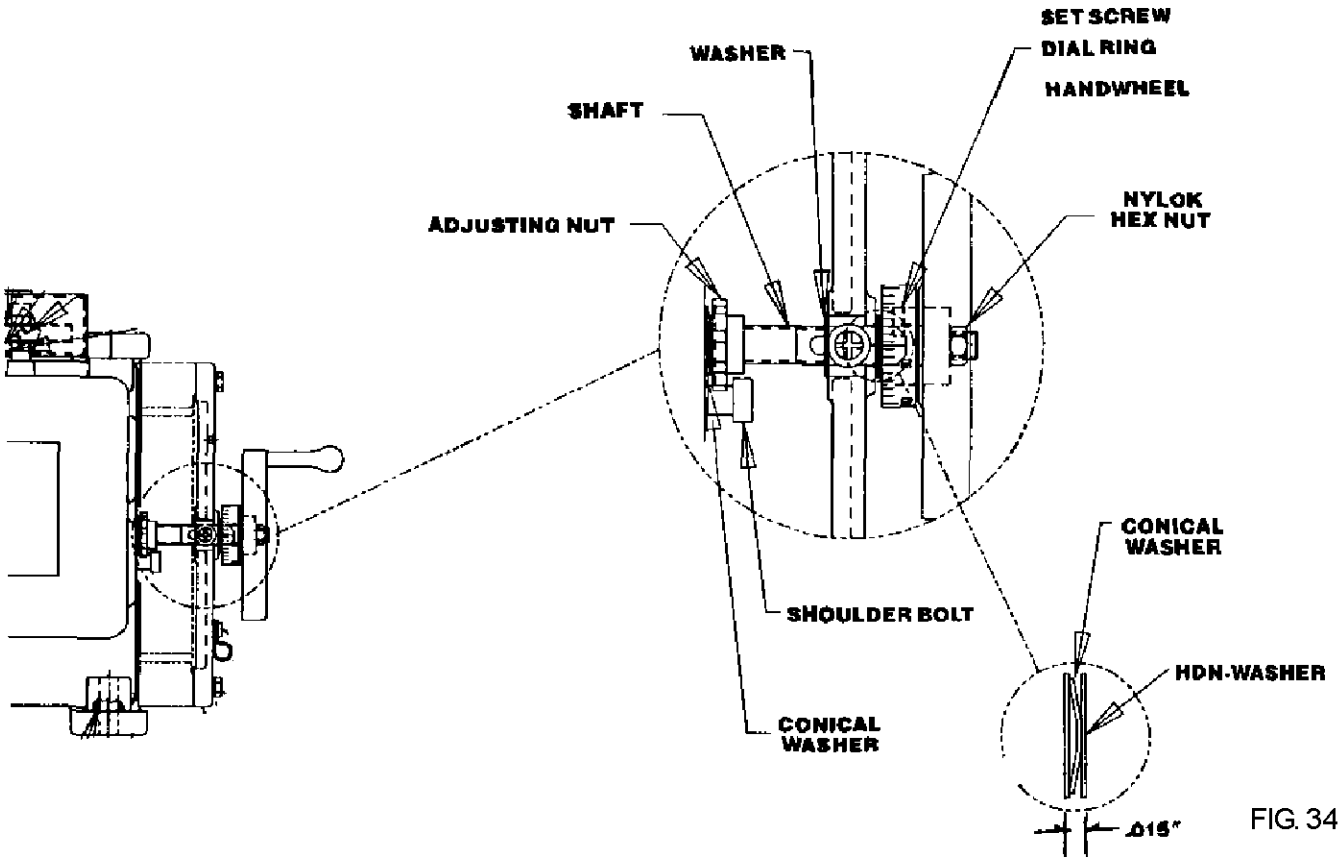

FIG. 34

BELT TENSION

The belt must be tensioned so when the lock handle is locked the maximum belt deflection is .12 at a 10lb./load.

SAFETY SWITCH ALIGNMENT

The front and rear door safety switches must be adjusted so the sender and receiver are parallel to each other and the maximum gap is .19 inches (5mm). See FIG. 35.

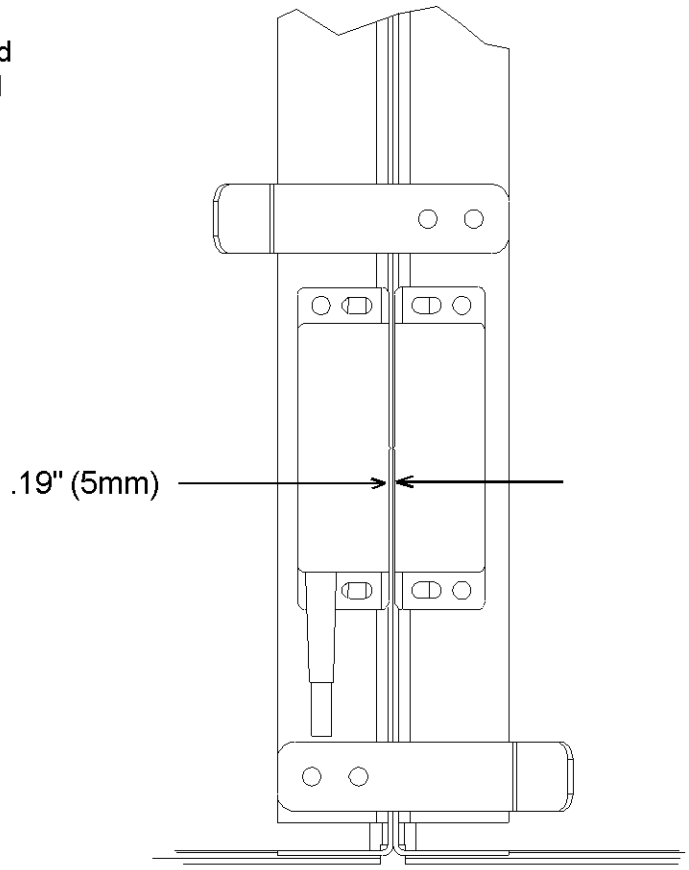

FIG. 35

ELECTRICAL TROUBLESHOOTING

SKILL AND TRAINING REQUIRED FOR ELECTRICAL SERVICING

This Electrical Troubleshooting section is designed for technicians who have the necessary electrical knowledge and skills to reliably test and repair the *ACCU*-Sharp electrical system. For those without that background, service can be arranged through your local distributor.

This manual presumes that you are already familiar with the normal operation of the Grinder. If not, you should read the Operators Manual, or do the servicing in conjunction with someone who is familiar with its operation.

Persons without the necessary knowledge and skills should not remove the control box cover or attempt any internal troubleshooting, adjustments, or parts replacement.

If you have any question not answered in this manual, please call your distributor. They will contact the manufacturer if necessary.

WIRE LABELS

All wires on the *ACCU*-Sharp have a wire label at each end for troubleshooting. The wire label has a code which tells you wiring information. The wire label has a seven position code. The first two digits are the wire number: 01-99. The next three numbers or letters are the code for the component to which the wire attaches. Example: GMC for Grind Motor Control. The last two numbers or letters are the number of the terminal on the component to which the wire attaches.

ELECTRICAL TROUBLESHOOTING INDEX

AC Main Power Controls ..... Page 28-30
Spin Drive Controls in Spin Mode ..... Page 31-32
Spin Drive Controls in Relief Mode ..... Page 33-34
Spin Drive Controls - General ..... Page 35
Grinding Motor Controls ..... Page 36-37
Traverse Drive Controls-w/prox ..... Page 38-39
Traverse--stopping and reversing ..... Page 40-42

ELECTRICAL TROUBLESHOOTING (Continued)

PROBLEM--AC Main Power Controls: no electrical power to control panel.
Verify all wires shown on the wiring diagram on pages 74-76 are correct and pull on wire terminals with approximately 3 lbs force to verify there are no loose terminal connections and/or no loose crimps between wire and terminal. If problem persists, test as listed below.

Possible Cause	Checkout Procedure	
Emergency Stop Botton (ESS) is Depressed	**A.** Pull Up on ESS Button	Machine works Yes--end troubleshooting No--go to Step **B.** next
You must push the System Start Switch (SSS) to get power to control Panel	**B.** Listen for the Magnetic Starter (MAG) contacts to pull in with a clunk	Machine works Yes--end troubleshooting No--go to step **C.** next.
Main Power Cord is not plugged in	**C.** Plug in main power cord	Machine works Yes--end troubleshooting No--go to step **D.** next.
Guard doors must be closed and ALL Switches **MUST** be turned **OFF** for contactor to pull in.	**D.** Close guard doors and turn off all switches.	Machine works Yes--end troubleshooting No--go to step **E.** next.
Main 15 amp outlet circuit breaker has tripped	**E.** Check circuit breaker in your building and reset if necessary. (Check wall outlet with a light to make sure it works)	Machine works Yes--end troubleshooting No--but light works in outlet--go to Step **F.** next. No--but light does not work in outlet. You must solve your power delivery problem independent of machine.
No 120 Volts AC power to Filter (FTR)	**F.** Check for 120V at Cord into FTR (Power Cord #32)	FTR "Line" Terminals for 120 Volts AC Yes--Go to Step **G**. next. No--Replace Power Cord
No 120 Volts AC power out of Filter	**G.** Check for 120V out of FTR	FTR "Load" Terminals for 120 Volts AC Yes--Go to Step **H**. next. No--Replace Filter
No 120 Volts AC power to Main Circuit Breaker (MCB) 15 Amp	**H.** Check for 120V to MCB	MCB Bottom Terminal to Terminal Block 4 (White) for 120 Volts AC Yes--Go to Step **I**. next. No--Check wires & replace if needed.
No 120 Volts AC power from Main Circuit Breaker (MCB)15 Amp	**I.** Check for 120V to MCB	MCB Top Terminal to Terminal Block 4 (White) for 120 Volts AC Yes--Go to Step **J**. next. No--Flip Switch on MCB to "ON" - Machine works-- end trouble shooting. Machine does not work-- replace MCB
No 120 Volts AC power to Secondary Circuit Breaker (SCB) 6 Amp.	**J.** Check for 120V to SCB	SCB (03SCB--) to nuetral (blue) terminal out of FTR for 120VAC Yes--Go to Step **K.** next. No--Check wires & replace if needed.

ELECTRICAL TROUBLESHOOTING (Continued)

Possible Causes	***Checkout Procedure***	
No 120 Volts AC power from Secondary Circuit Breaker (SCB) 6 Amp.120	**K.** Check for 120V from SCB	SCB (67SCB--) to nuetral (blue) terminal out of FTR for 120 VAC Yes-- Go to Step **L.** next. No--Flip Switch on SCB to "ON"-Machine works--end of troubleshooting. Machine does not work--replace SCB
Volts AC power not delivered to Terminal Stri	**L.** Check for 120 Volts AC at terminal strip.	Terminal "11" on Terminal Strip 2 "7TB2-11" to Terminal Block 4 (White) for 120 Volts AC Yes--Go to Step **M**. next. No--Check wires #7 & #3, Check Jumper on Terminal Blocks 1-3.
Grinding Motor Switch (GMS) not working	**M.** Check for 120 Volts AC at GMS Terminals 1	Measure 120 volts AC from GMS Terminal 1 to Term Block 4(White) Yes--Go to Step **N**. next. No--Flip Switch and check again- Works--Switch is upside down. Does not work-- Check wiring/Verify Continuity/ Replace Switch
Spin Motor Switch (SMS) not working	**N.** Check for 120 Volts AC at SMS Terminals 1	Measure 120 volts AC from SMS Terminal 1 to Term Block 4(White) Yes--Go to Step **O**. next. No--Flip Switch and check again- Works--Switch is upside down. Does not work-- Check wiring/ Verify Continuity/Replace Switch
Bad Emergency Stop Switch (ESS)	**O.** Check voltage after the (ESS) MAKE SURE SWITCH IS PULLED UP!	Measure 120 Volts AC from (ESS) term 2 to Term Block 4(White) Yes--Go to Step **P.** next No--Check wire for continuity, then verify switch continuity. If bad replace ESS contactor (NC)
Bad System Start Switch (SSS)	**P.** Hold in SSS and Check voltage after the (SSS)	Measure 120 Volts AC from (SSS) term 3 to Term Block 4(White) Yes--Go to Step **Q.** next No--Check wire for continuity, then verify switch continuity. If bad replace SSS contactor (NO)
Low Voltage Relay (REL) not operating	**Q.** Hold in SSS and Check voltage at LVR. LVR must be installed in 8-pin socket.	Measure 120 Volts AC from LVR term 8 to Term Block 4(White) Yes--Go to Step **R.** next No--Check for 120 Volts AC from LVR term 6 to term 7. Yes--Verify Continuity of term 1 to term 8 on LVR. Replace LVR if bad. No--Verify Continuity of Wires.
Bad Main Contactor (MAG)	**R.** Hold in SSS and Check voltage at MAG A1 & A2.	Measure 120 Volts AC from MAG Term A1 to Term A2 Yes--MAG Should pull in with clunck, if not replace MAG. No--Verify Continuity of Wires.

***PROBLEM*--Machine Shuts off when you turn on Grind motor switch or Spin Motor Switch.**

Possible Cause	***Checkout Procedure***	
Guard Doors are Open	**A.** Close the front and rear Guard Doors	Machine works Yes--end troubleshooting No--go to Step **B.** next
Door Safety Switches are not working properly	**B.** Check Alignment of Door Safety Switches on Front and Rear Guard Doors.	See Alignment section of this Manual. Machine works Yes--end troubleshooting No--go to Step **C.** next
No 24 Volts DC to Safety Monitor (SSM)	**C.** Check SSM for 24 Volts DC. (Turn switches off and press start switch to pull in MAG before testing voltages)	Measure 24 volts DC from SSM Terminal A1+ to Terminal A2- Yes--Go to Step **E**. next. No--Go to Step **D**. next.
No Power into 24 Volt DC Power Supply (PWR)	**D.** Check PWR for 120 Volts AC. (Turn switches off and press start switch to pull in MAG before testing voltages)	Measure 120 volts AC from PWR Terminal L to Terminal N Yes--Verify 24 VDC out of PWR (V+ to V-). Replace if no Voltage out; or Check Wiring & Verify Continuity to SSM if there is 24 VDC. No--Verify Wiring and Continuity from PWR to terminal blocks.
No Power Out to Door Switches	**E.** Verify 24Volts DC out to Door Switches.	Measure approximately 24 volts DC from Terminal Strip 1 Terminal 17 to Terminal Strip 2 Terminal 3 Yes--Go to Step **F**. next. No--Verify Continuity of Wires to Terminal strip, Replace SSM if wires check OK.
Rear Door Switch is Bad	**F.** With Rear doors Cloded Verify 24Volts DC back form rear Door Switch.	Measure approximately 24 volts DC from Terminal Strip 2 Terminal 3 to Terminal Strip 1 Terminals 14 and 15. Yes--Go to Step **G**. next. No--Check Alingment of Rear door switch. If no Voltage to Term14 or 15 then replace rear switch.
Front Door Switch is Bad	**G.** With Front doors Cloded Verify 24Volts DC back form Front Door Switch.	Measure approximately 24 volts DC from Terminal Strip 1 Terminal 17 to Terminal Strip 2 Terminals 2 and 4. Yes--Replace SSM No--Check Alingment of Front door switch. If no Voltage to Term2 or 4 then replace front switch.

***PROBLEM*--(MAG) turns on only with System Start Switch held in.**

Possible Cause	***Checkout Procedure***	
(MAG) holding contact has failed	**A.** Check wiring to and from MAG holding contact in. Verify the magnetic starter holding contact is working.	Measure 120 Volts AC at MAG term L3 to Term Block 4(White) after SSS is pushed. Yes--Verify Wiring to LVR No--Check voltage at T3. If 120 Volts AC Replace MAG. If no 120 Volts AC verify wiring to T3.

PROBLEM--SPIN DRIVE NOT WORKING IN SPIN MODE.

Assuming (SSS) System Start Switch is on with 120 volts AC to control panel and all other functions are working.

Verify all wires shown on the wiring diagram on pages 72-75 are correct and pull on wire terminals with approximately 3 lbs force to verify there are no loose terminal connections and/or not loose crimps between wire and terminal. If loose terminals are found, retighten and retest system. If problem persists, test as listed below.

Spin Speed Pot (SSP) set to zero	**A.** Set (SSP) to 200 on the control panel.	Spin Motor works Yes--end troubleshooting No--go to Step **B** next
Spin Motor Switch (SMS) is not on	**B.** Turn (SMS) switch on	Spin Motor works Yes--end troubleshooting No--go to Step **C.** next
Spin Rotation Switch (SRS) is not on	**B.** Turn (SRS) switch t direction of reel rotation required. NOTE: center position is off	Spin Motor works Yes--end troubleshooting No--go to Step **C.** next
Circuit Breaker is Tripped (4 AMP)	**C.** Reset Circiut Breaker on fornt of Control Panel. Push in if tripped.	Spin Motor works Yes--end troubleshooting No--go to Step **D.** next

OPEN CONTROL BOX AND SWITCH KEYED SELECTOR SWITCH TO TEST. PRESS START SWITCH IF MAG IS NOT PULLED IN. ALSO TURN ON SWITCHES AS STATED ABOVE.

Spin Drive Control (SDS) is not working	**D.** Check (SDS) L1 to L2 for 120 Volts AC	(SDC) Term L1 to term L2 for 120 volts AC Yes--go to Step **E.** next No--Verify Power to Circuit Breaker and SMS and continuity of wires. Replace CB or SMS if needed.
	E. Check (SDC) A1 & A2 for approx. 90 Volts DC (Have Spin Speed Pot set to 400 RPM)	(SDC) Term A1 to A2 for approx 90 volts DC Yes--go to Step **F.** next No--go to Step **L.** next
	F. Check for approx 90 Volts DC input to (SRS)	(SRS) Term 6 to 7 for approx 90 Volts DC Yes--go to Step **G.** next No--replace wires 13 & 14
	G. Check for approx 90 Volts DC out put from (SRS).	(SRS) Term 2 to 3 for approx 90 Volts DC Yes--go to Step **H.** next No--replace (SRS) switch
Spin Drive motor is bad	**H.** Check spin motor continuity **Disconnect Power from Machine!**	Remove wires at Terminal Strip 1, Term 4 & 5 check 0 ohms across the black and white wires Yes--end troubleshooting No--go to Step **P.** next

Possible Cause	Checkout Procedure	
Spin Speed Pot (SSP) is not working	**L.** (SSP) (10K) on control panel	On (SDC), Remote Speed check Black wire H terminal to Red wire W terminal for: Pot Full CCW --O volts DC Pot Full CW--4.4 Volts DC Check White wire L terminal to Red wire W terminal for: Pot Full CCW --4.4 Volts DC Pot Full CW-- DC 0 Volts DC Yes--Go to Step M No--Go to Step N.
Spin Torque Pot (STP) is not set correctly	**M.** Check (STP) remote torque on the top (SDC) board	(STP) OK (SDC) remote torque should be set at 2:00 o'clock position. See Pages 24 and 25. Adjust if incorrect and check Spin Drive Function. Yes--end of troubleshooting No--Replace (SDC)
(SSP) is not working	**N.** (SSP) (10K) Remove 3 Remote Speed wires. Red wire to term W White wire to term L Black wire to term H	Check for 10,000 ohms Red wire to white wire Full CCW--0 ohms Full CW-10,000 ohms Red wire to black wire Full CCW--10,000 ohms Full CW--0 ohms Yes--replace (SDC) No--replace (SSP)
Worn Motor Brushes	**P.** Inspect Motor Brushes **DISCONNECT POWER FROM MACHINE !**	Remove the brushes one at a time and maintain orientation for reinsertion. See if brush is worn short 3/8" (10 mm) minimum length. Yes--replace motor brushes No--replace Spin Drive Motor

PROBLEM--Spin Drive not working in relief mode.

Assuming (SSS) System Start Switch is on with 120 volts AC to control panel and all other functions are working.

Verify all wires shown on the wiring diagram on pages 74-76 are correct and pull on wire terminals with approximately 3 lbs force to verify there are no loose terminal connections and/or no loose crimps between wire and terminal. If loose terminals are found, retighten and retest system. If problem persists, test as listed below.

Possible Cause	Checkout Procedure	
Relief Torque Pot (RTP) set to zero	**A.** Set (RTP) to 20 on the control panel.	Spin Motor works Yes--end troubleshooting No--go to Step B. next
Spin Motor Switch (SMS) is not on	**B.** Turn (SMS) switch on	Spin Motor works Yes--end troubleshooting No--go to Step C. next
Spin Rotation Switch (SRS) is not on	**C.** Turn (SRS) switch to direction of reel rotation required. NOTE: center position is off	Spin Motor works Yes--end troubleshooting No--go to step D. next
Circuit Breaker is Tripped (4 AMP)	**D.** Reset Circiut Breaker on fornt of Control Panel. Push in if tripped.	Spin Motor works Yes--end troubleshooting No--go to step E. next

OPEN CONTROL BOX AND SWITCH KEYED SELECTOR SWITCH TO TEST. PRESS START SWITCH IF MAG IS NOT PULLED IN. ALSO TURN ON SWITCHES AS STATED ABOVE.

Spin Drive Control (SDS) is not working	**E.** Check (SDS) L1 to L2 for 120 Volts AC	(SDC) Term L1 to term L2 for 120 Volts AC Yes--go to Step F. next No--Verify Power to Circuit Breaker and SMS and continuity of wires. Replace CB or SMS if needed.
	F. Check (SDC) A1 & A2 for approx. 20 Volts DC (Have Relief Torque set to Red Line)	(SDC) Term A1 to A2 for approx 20 Volts DC Yes--go to Step G. next No--go to Step L. next
	G. Check for approx 20 Volts DC input to (SRS)	(SRS) Term 6 to 7 for approx 20 Volts DC Yes--go to Step H. next No--replace wires 13 & 14
	H. Check for approx 20 Volts DC out put from (SRS).	(SRS) Term 2 to 3 for approx 20 Volts DC Yes--go to Step I. next No--replace (SRS) switch
Spin Drive motor is bad	**I.** Check spin motor continuity **DISCONNECT POWER FROM THE MACHINE**	Remove wires at Terminal Strip 1, Term 4 & 5 check 0 ohms across the black and white wires Yes--end troubleshooting motor should work (if it does not, replace motor) No--go to Step P. next

Possible Cause	Checkout Procedure	
(RTP) Relief Torque Pot is not working	**L.** Check (RTP) (50K) on control panel (check voltage with pots at fully clockwise and counterclockwise positions)	On (SDC), Remote Torque check Black wire H terminal to Red wire W terminal for: Pot CCW-- 0 volts DC Pot CW--.2 Volts DC Check White wire L terminal to Red wire W terminal for: Pot CCW--.2 Volts DC Pot CW-- DC 0 Volts DC Yes--go to Step **M.** next No--go to Step **N.** next
Relief Speed Pot (RSP) is not set correctly.	**M.** Check (RSP) remote speed (10k) on (SDC) top board (this is preset to 9:00)	(RSP) to the top (SDC) board should be set at 9:00. See pages 24 and 25. Adjust if incorrect and check Relief Torque function. Yes--end of troubleshooting No--replace (SDC)
(RTP) is not working	**N.** (RTP) (50K) Remove 3 Remote Torque Wires red wire to term W white wire to term L. black wire to term H.	Check for 50,000 ohms Red wire to white wire Full CCW--0 ohms Full CW--50,000 ohms Red wire to black wire Full CCW--50,0000 ohms Full CW--0 ohms Yes--Replace (SDC) No--replace (RTP)
Worn Motor Brushes	**P.** Inspect Motor Brushes **DISCONNECT POWER FROM MACHINE !**	Remove the brushes one at a time and maintain orientation for reinsertion. See if brush is worn short 3/8" (10 mm) minimum length

PROBLEM : Spin drive speed goes at one speed only.

Possible Cause	Remedy	
Wiring hookup to potentiometer is improper. (If components have been replaced	**A.** Check potentiometer wiring for proper hookup. See that speed pot is wired per electrical diagram	If wiring is wrong, correct and test. Yes--end of troubleshooting No--Go to Step B. next
Defective spin speed control (SSP) potentiometer.	B. (SSP) 10K Remove 3 remote speed wires. red wire to term W white wire to term L black wire to term H	Check for 10,000 ohms Red wire to white wire Full CCW--0 ohms Full CW--10,000 ohms Red wire to black wire Full CCW--10,000 ohms Full CW--0 ohms Yes-- Go to Step C. next No--Replace (SSP)
Main circuit board dial pot settings not correct. (If board has been replaced	C. Check all pot settings on both boards as of the (SDC) shown on Pages 24 and 25. (See Adjustment Section Spin Drive Control [SDC] Board Setting).	Yes-- end of troubleshooting No--replace (SDC)

PROBLEM: Spin drive motor speed varies

IR Comp trim pot not adjusted properly.	A. See adjustment section for trim pot setting on Page 24.	Original adjustment was not set properly
Torque to rotate the reel too high.	B. Readjust bearing preload for the reel. Maximum torque load 25 in./lb to rotate reel.	Too much load on drive motor will cause motor to hunt and vary speed.
Check all terminal connections for tightness.	C. When .250 female spade terminals are not tight, remove and crimp slightly together. When reinstalling, push on pressure should have increased for good contact.	When connections are not tight the control board varies voltage to the DC motor which then varies speed.

PROBLEM-- Grinding motor not working.

Assuming (SSS) System Start Switch is on with 120 volts AC to control panel and all other functions are working.

Verify all wires shown on the wiring diagram on pages 74-76 are correct and pull on wire terminals with approximately 3lbs force to verify there are no loose terminal connections and/or no loose crimps between wire and terminal. If loose terminals are found, retighten and retest system. If problem persists, test as listed below.

Possible Cause	Checkout Procedure	
Grinding Motor Switch (GMS) is not on	**A.** Turn switch on	Grinding Motor works Yes--end troubleshooting No--go to Step **B.** next
Guard doors are not closed	**B.** Close Front and Rear guard doors.	Grinding Motor works Yes--end troubleshooting No--go to Step **C.** next
15 Amp Circuit Breaker (CB) is tripped	**C.** Check 15 amp CB on front of Control panel. Press in if tripped.	Grinding Motor works Yes--end troubleshooting No--go to Step **D.** next
GMS not working	**D.** Check for power to GMS	GMS term 5 to Terminal Block 9 (White) for 120 Volts AC Yes--go to Step **E.** next No--With power off, check continuity of wires to GMS.

SWITCH KEYED SELECTOR SWITCH TO TEST. PRESS START SWITCH IF MAG IS NOT PULLED IN. ALSO TURN ON SWITCHES AS STATED ABOVE.

	E. Check for power from GMS	GMS Term 6 to Terminal Block 9 (White) for 120 Volts AC Yes--Go to Step **F.** next No--replace GMS
Relay contacts not working	**F.** Check for power to relay contacts	(REL) Term 2 to Term 6 for 120 Volts AC Yes--Go to Step **G.** next No--Check wires to REL Term 2 & 6
Keyed Selector Switch (KSS) not Working	**G.** Check for power to KSS	(KSS) Term 2 to Terminal Block 9 (White) for 120 Volts AC Yes--Go to Step **H.** next No--Check wires from GMS to KSS

Possible Cause	Checkout Procedure	
SWITCH KEYED SELECTOR SWITCH TO RUN. PRESS START SWITCH IF MAG IS NOT PULLED IN. TURN OFF ALL SWITCHES.		
	H. Check Continuity of contact on KSS **DISCONNECT POWER FROM MACHINE!**	With GMS OFF, Turn Keyed Switch to RUN. Verify Continuity of Contact Term 2 to 1. Yes--Go to Step **I.** next No--Replace Contact (NC)
Relay Not Working	**I.** Turn off Power and disconnect wire to motor. Reconnect Power. Close Guard Doors and turn on GMS. Check for 120 Volts AC at end of cord.	Measure 120 Volts AC at Grinding Motor Cord Grind Motor End. Yes--Reconnect Motor. If it does not work replace motor. No--Verify Continuity of grind motor wire and replace if bad. If Grind motor checks ok then replace Relay (REL).

PROBLEM--Traverse Drive not working.

Assuming (SSS) System Start Switch is on with 120 volts AC to control panel and all other functions are working.

Verify all wires shown on the wiring diagram on pages 74-76 are correct and pull on wire terminals with approximately 3lbs force to verify there are no loose terminal connections and/or no loose crimps between wire and terminal. If loose terminals are found, retighten and retest system. If problem persists, test as listed below.

Possible Cause	Checkout Procedure	
Traverse Motor Switch (TMS) is not on	**A.** Turn on (TMS)	Traverse works Yes--end troubleshooting No--got to Step **B.** next
Traverse Speed Pot (TSP) set to zero	**B.** Set (TSP) to 35 on the control panel	Traverse works Yes--end troubleshooting No--go to Step **C.** next
Fuse on Traverse Drive Control (TDC) has failed	**C.** Check fuse and replace if failed. See Page 23. Too heavy a grind causes grinding head traverse motor to overload and blow the fuse, NOTE: Fuse can not be checked visually. Fuses must be continuity checked.	Traverse works Yes--end troubleshooting No--go to Step **D.** next
Traverse Drive Control (TDC) is bad	**D.** Check for 120 Volts AC incoming to (TDC)	On (TDC) Terminal L1 to L2 for 120 Volts AC Yes--Go to Step **F.** next No--Go to Step **E.** next
Bad Traverse Motor Switch (TMS)	**E.** Check for 120 Volts AC at (TMS). (Make certain (TMS) is on)	Measure 120 volts AC from TMS Terminal 5 to Term Block 4(White) Yes--Go to Step **L.** next. No--Flip Switch and check again- Works--Switch is upside down. Does not work-- Check wiring/Verify Continuity/ Replace Switch

Possible Cause	Checkout Procedure	
No DC Voltage from (TDC) Traverse Drive Control	**F.** Check for 90 Volts DC across (TDC) terminals #A1 to #A2 this voltage drives the DC traverse motor. NOTE: Traverse must be on and have (TSP) turned full CW to maximum voltage of 90 VDC	Check (TDC) terminals #A1 to #A2 for 90 Volts DC Yes--go to Step **G.** next No--go to Step **H.** next
Traverse Motor is bad	**G.** Check grinding motor continuity **DISCONNECT POWER FROM MACHINE**	Remove motor wires from Terminal Strip 1 terminals #7 & #8 check for 0 ohms across the black and white wires Yes-end troubleshooting No--go to Step **K.** next
(TSP) is not working	**H.** Check (TSP) (10K) on control panel	(TDC) Pin #8 to #7 Pot Full CCW Pot Full CW 0VDC 9.75 VDC Pin #8 to 9 Pot Full CCW Pot Full CW 9.75 VDC 0 VDC Yes--replace the (TDC) No--go to Step **J.** next
(TSP) (10K) is bad	**J.** Check (TSP) for 10,000 ohms. Remove three wires from (TDC) red from term #8 white from term #7 black from term #9	Check for 10,000 ohms red to white wires Full CCW--0 ohms Full CW--10,000 ohms Red to black wires Full CCW--10,000 ohms Full CW--0 ohms Yes--replace the (TDC) No--replace (TSP)
Worn motor brushes	**K.** Inspect Motor Brushes **DISCONNECT POWER FROM MACHINE**	Remove the brushes one at a time and maintain orientation for reinsertion. See if brush is worn short, 3/8" (10 mm) minimum length. Yes--replace motor brushes No--replace Traverse Motor

PROBLEM--Traverse does not stop to reverse directions when flag goes under the proximity switch on the left side or right side of machine.

Gap between flag and prox is incorrect.	A. Gap between flag and prox should be 3/16 to 1/4" (4-6 mm). Prox LED does not light when flag is under prox.	If incorrect, adjust per adjustment section of manual. Yes--end troubleshooting No--go to Step B. next	
Proximity Switch is bad.	B. Proximity switch is not working properly or wire connections are loose.	First check to see if proximity light comes on. When the light is on, it means that there is electricity coming to proximity switch. Actuate prox switches with steel tool to take measurements.	The light coming on shows the proximity is getting electrical contact.
		Left proximity (PROX 1) check Traverse drive Control (TDC) between terminals #13 (black wire) and #15 (brown wire).	Proximity light on- 0 Volts DC Proximity light off- 12 Volts DC
		Right proximity (PROX) check #13 (black wire) and #15 (brown wire).	Proximity light on- 0 Volts DC Proximity light off- 12 Volts DC
			Replace proximity switch if the voltages do not read as above.

PROBLEM--Traverse speed control goes at one speed only.

Possible Cause	Checkout Procedure	
Defective speed control potentiometer	**A.** Check potentiometer on control panel.	Traverse Drive Control Pin #8 to 7 Pot full CCW — 0 VDC Pot Full CW — 9.75 VDC Pin #8 to 9 Pot full CCW — 9.75 VDC Pot Full CW — 0 VDC Yes--Pot is OK No--Go to Step **B.** next
	B. Check potentiometer for 10,000 ohms. Remove three wires from Traverse Drive Control red from term #8 white from term #7 black from term #9	Check for 10,000 ohms Red to White wires Full CCW - 0 ohms Full CW - 10,000 ohms Red to Black wires Full CCW - 10,000 ohms Full CW - 0 ohms Yes--Go to Step **C.** next No--replace potentiometer. Wiper inside of potentiometer controls speed. Wiper may be bad and not making contact.
Wiring hookup to potentiometer is improper. (If components have been replaced.)	**C.** Check potentiometer wiring for proper hookup. See that speed pot is wired per electrical diagram	Wrong wire hookup effects traverse control. Reversing red and orange wires to potentiometer to the D C motor will run at zero speed but maximum will be too slow. Reversing red and white wires does not affect speed control. Check for Proper function. Yes--end troubleshooting No--Go to Step **D.** next
Main circuit board dial pot settings not correct. (If board has not been replaced.)	**D.** Check all pot settings on circuit board as shown in wiring diagram. (See adjustment section Traverse Motor Control Board Settings.)	Minimum and maximum pot settings effect traverse speed.

PROBLEM--If the carriage traverses to one end of stroke or the other and it stops and does not reverse direction.

Possible Cause	Remedy	Reason
Proximity switch is not working properly or wire connections are loose	First check to see of proximity light comes on. When the light is on, it means that there is electricity coming to proximity switch. Actuate prox switches with steel tool to take measurements.	The light coming on shows the proximity is getting electrical contact.
	Left proximity (PROX1) check Traverse drive Control (TDC) between terminals #14 (black wire) and #15 (brown wire).	Proximity light on- 0 Volts DC Proximity light off- 12 Volts DC
	Right proximity (PROX) check (TDC) between terminals #13 (black wire) and #15 (brown wire).	Proximity light on- 0 Volts DC Proximity light off- 12 Volts DC
		Replace proximity switch if the voltages do not read as above.
The dwell time on the traverse drive control not set properly.	Reset dwell time as required. One increment increases Dwell time by 1/2 second. NOTE: Factory dwell setting is 4.	
Loose wire to proximity switch.	Check wire connections from the proximity switches and tighten down screws.	A loose wire connection will give intermittent electrical contact.

MECHANICAL TROUBLESHOOTING

Possible Cause	Checkout Procedure
PROBLEM--Reel ground concave, convex or with irregular shape.	
Too heavy a grind on the final grinding passes.	Grind out reel using correct sparkout procedure as specified in the Operators Manual.
Overhead clamps and tooling bar clamps not tight.	Tighten all locking hand knobs, Four knobs on the tooling bar, four knobs on the overhead bar clamp and two on the overhead clamp swivels. When using center brackets, insure the fixed center is tight as well as the moveable center lock knob.
Cross slide lock handles not tight.	Tighten the horizontal and vertical cross slide lock handles.
Grinding head lock handles not tight.	Tighten the two lock handles on the adjusting arm slots and one on the vertical height adjustment.
Loose gibs on the carriage.	Adjust the gibs per the procedure in the adjustment section in this manual.
Linear bearings on the grinding head carriage are bound with grit, loose or damaged .	The lineal bearing must be preloaded to the traverse shafts with no vertical movement. See manual adjustment section for carriage linear bearing adjustments. Lubricate the linear bearings per the procedure as specified in this manual. Replace bearings if they cannot be properly adjusted.

PROBLEM--Roundness of reel varies, High low reel blades are observed.

Possible Cause	Checkout Procedure
Too heavy a grind on the final grinding passes.	Grind out reel using correct sparkout procedure as specified in the Operators Manual.

PROBLEM--Stock removal much differant traversing left compared to traversing right.

The possible causes and checkout procedures are the same as listed above for concave, convex or with irregular shape.

Possible Cause	Checkout Procedure
PROBLEM--Relief grind on the reel blades does not go full length.	
The right side corner of the grinding wheel is always to be in contact with the reel blade. This is high point of the relief finger.	The right hand side of the grinding wheel is not in full contact for relief grinding. See Operators Manual for NORMAL HELIX AND REVERSE HELIX for information of using the grinding wheel.

PROBLEM--Too heavy a burr on cutting edge of reel blades.

Possible Cause	Checkout Procedure
Traverse speed set too high causing a heavy burr on the reel blade when spin grinding.	Traverse speed should be set lower approximately 12 ft/min. (meters/min.) for a smaller burr on cutting edge.
Too heavy a grind on the final grinding passes.	Grind out reel using correct sparkout procedure as specified in the Operators Manual.

PROBLEM--Cone shaped reel after grinding.

Grinding head travel not parallel to the reel center shaft.	Grinding head travel was not setup parallel to the reel center shaft in vertical and horizontal planes. See Align the Reel Section in operator's Manual

PROBLEM-- Traverse speed is too slow.

Possible Cause	Remedy
Lineal bearing in the carriage are set too tight.	Readjust linear bearings for proper tension per the adjustment section of this manual.
Actuator springs set too tight	Check to see if actuator bearings have been overloaded, causing the bearing to not rotate freely. Verify proper adjustment per the adjustment section of this manual.

- THIS PAGE WAS LEFT BLANK INTENTIONALLY FOR NOTE TAKING PURPOSES -

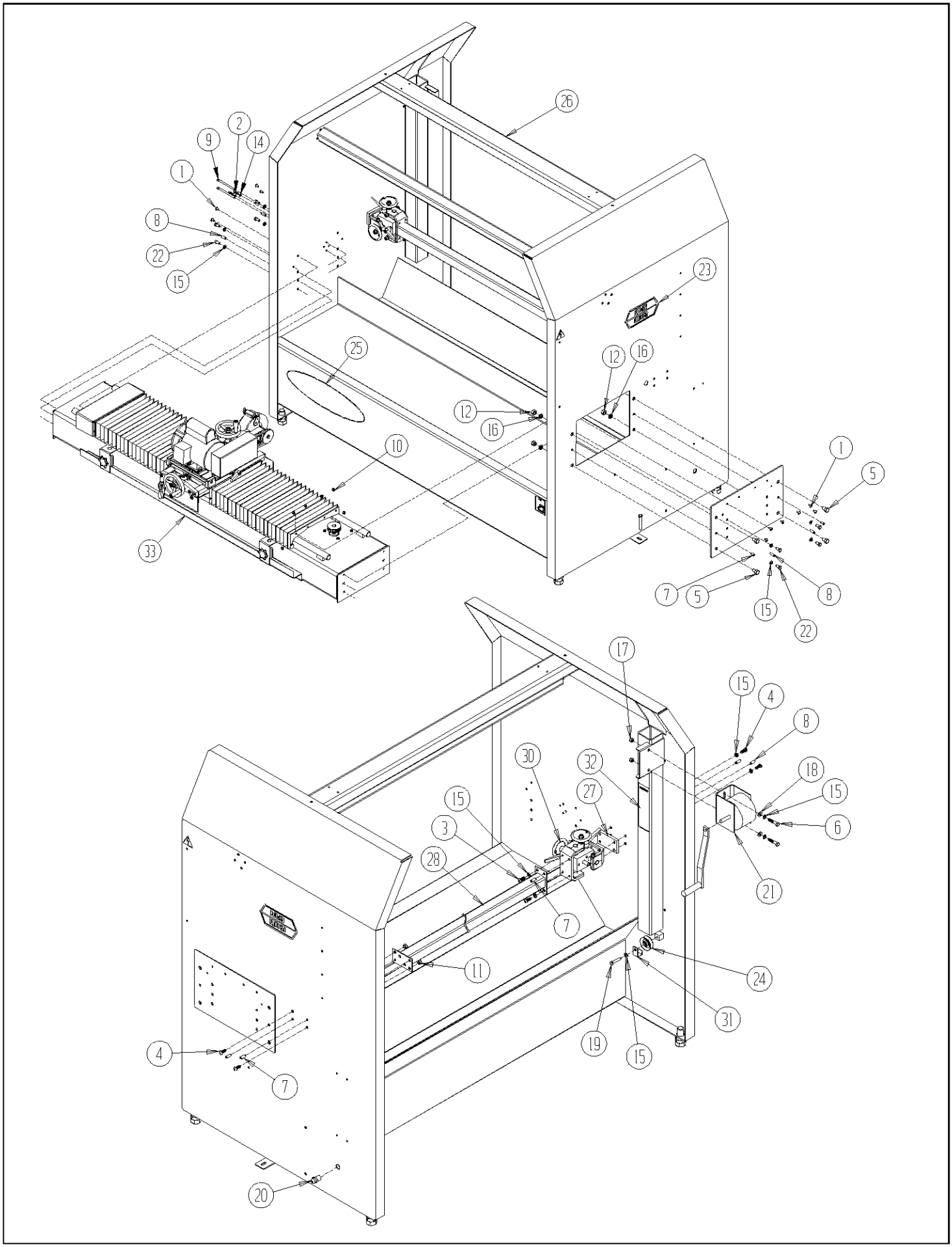
26
2
9
14
1
8
22
15
23
25
12
16
12
16
10
1
5
33
7
5
15
8
22
17
15
4
8
30
32
18
15
27
15
6
3
28
21
7
11
24
31
19
15
4
7
20

DIAGRAM NO.	PART NO.	DESCRIPTION
1	B250819	Truss Head Machine Screw 1/4-20 x 1/2" Long
2	B251211	Socket Head Cap Screw 1/4-20 x 3/4" Long
3	B371201	Hex Head Cap Screw 3/8-16 x 3/4" Long
4	B372016	Button Head Socket Cap Screw 3/8-16 x 1 1/4" Long
5	B501601	Hex Head Cap Screw 1/2-13 x 1" Long
6	B371601	Hex Head Cap Screw 3/8-16 x 1" Long
7	H371202	3/8 Dia. x 3/4" Long Roll Pin
8	H371602	3/8 Dia. x 1" Long Roll Pin
9	B256411	Socket Head Cap Screw 1/4-20 x 4" Long
10	J257000	1/4-20 Thin Locknut
11	J377100	3/8-16 Locknut
12	J501000	1/2-13 Hex Nut
14	K251501	1/4" Split Lockwasher
15	K371501	3/8" Split Lockwasher
16	K501501	1/2" Split Lockwasher
17	J371000	3/8-16 Hex Nut
18	K370001	3/8" SAE Flat Washer
19	B372801	Hex Head Cap Screw 3/8-16 x 1 3/4" Long
20	**3707093**	**Strain Relief**
21	3708645	Winch
22	3708693	3/8-16 x .75" Long Hex Head Tapping Screw
23	3709990	Foley United Decal
24	3709795	Pulley
25	6009223	Accu-Sharp Decal
26	6009540	Main Base Weldment
27	6059005	Tooling Bar Spacer Block
28	6059010	Tooling Bar Weldment
30	6059552	Cross Slide Assembly
31	6059003	Pulley Guard Bracket
32	6309037	Winch Warning Decal
33	6059525	Traverse, Carrigage & Grinding Head Sub-assembly

6059552 CROSS SLIDE ASSEMBLY

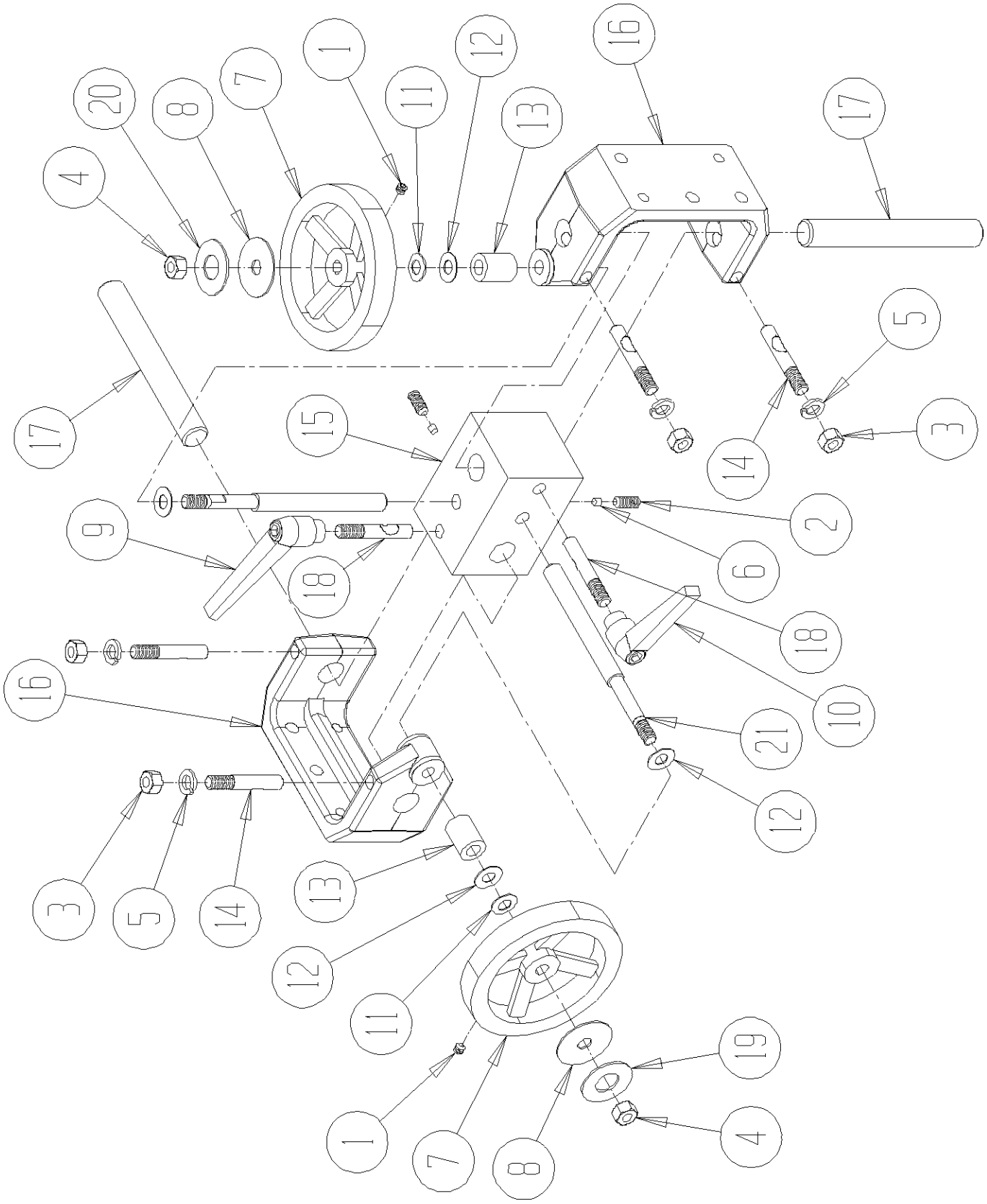

DIAGRAM NO.	PART NO.	DESCRIPTION
1	C310820	5/16-18 x 1/2" Long Socket Set Screw
2	C311220	5/16-18 x 3/4" Long Socket Set Screw
3	J371000	3/8-16 Hex Nut
4	J377000	3/8-16 Jam Locknut
5	K371501	3/8 Split Lockwasher
6	3579109	3/16 Dia. Nylon Plug
7	3708148	Handwheel
8	3708665	5/8 OD Flat Washer
9	3708705	5/16-18 Orange Adjustable Handle
10	3708706	5/16-18 Grey Adjustable Handle
11	3709062	Conical Washer
12	3709304	Thrust Washer
13	3969065	Spacer
14	6009035	Shaft Locking Stud
15	6009081	Cross Slide
16	6009082	Cross Slide Support
17	6009095	Slide Shafts
18	6309113	5/16-18 Shaft Locking Stud
19	6309114	Orange Decal
20	6309115	Grey Decal
21	6309390	ACME Adjusting Shaft

6059545 GUARD DOOR ASSEMBLY

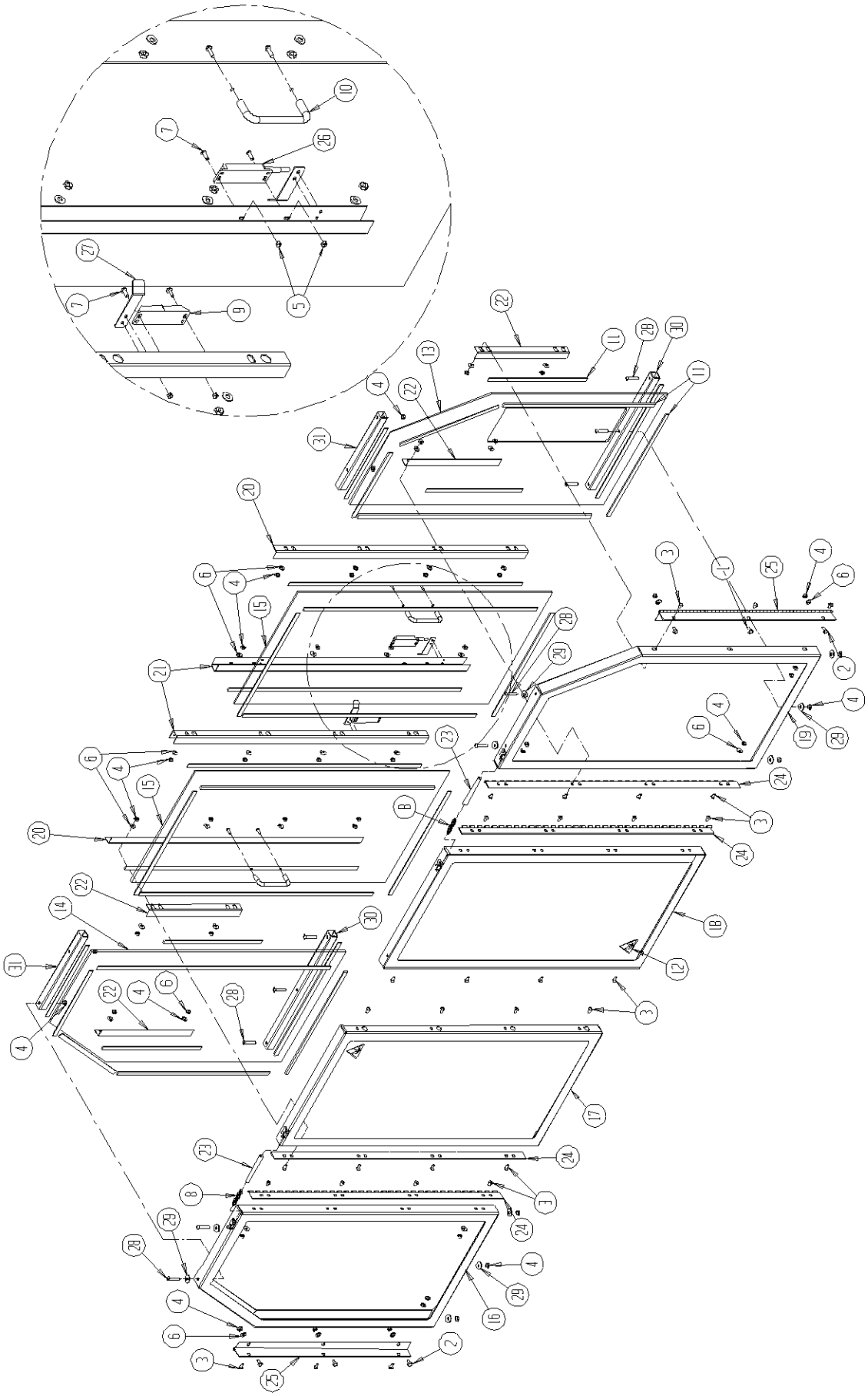

DIAGRAM NO.	PART NO.	DESCRIPTION
1	B250616	1/4-20 x 3/8" Long Button Head Socket Cap Screw
2	B251201	1/4-20 x 3/4" Long Hex Head Cap Screw
3	B250816	1/4-20 x 1/2" Long Button Head Socket Cap Screw
4	J257000	1/4-20 Thin Locknut
5	J167000	#8-32 Thin Locknut
6	K250001	1/4 SAE Flat Washer
7	3708820	#8-32 x 1/2" Long Button Head Safety Screw
8	3708855	Extention Spring
9	3707647	Coded Door Safety Magnet
10	3708857	Pull Handle
11	3708378	Foam Strip
12	3708458	Warning Sharp Decal
13	6059012	Front Outside Window - RH
14	6059013	Front Outside Window - LH
15	6059014	Front Inside Window
16	6059072	Front Outside Window Frame Weldment - LH
17	6059071	Front Inside Window Frame Weldment - LH
18	6059070	Front Inside Window Frame Weldment - RH
19	6059069	Front Outside Window Frame Weldment - RH
20	6059036	Center Window Support
21	6329071	Window and Switch Support
22	6059068	Short Window Support
23	6059088	Spring Cover Sleeve
24	6059029	Front Center Hinge
25	6059030	Front End Hinge
26	6059021	Front Door Safety Switch Assembly
27	6309038	Door Bracket
28	B252416	1/4-20 x 1 1/4" Long Button Head Cap Screw
29	R000453	Large Flat Washer
30	6059066	Bottom Window Support
31	6059067	Top Window Support

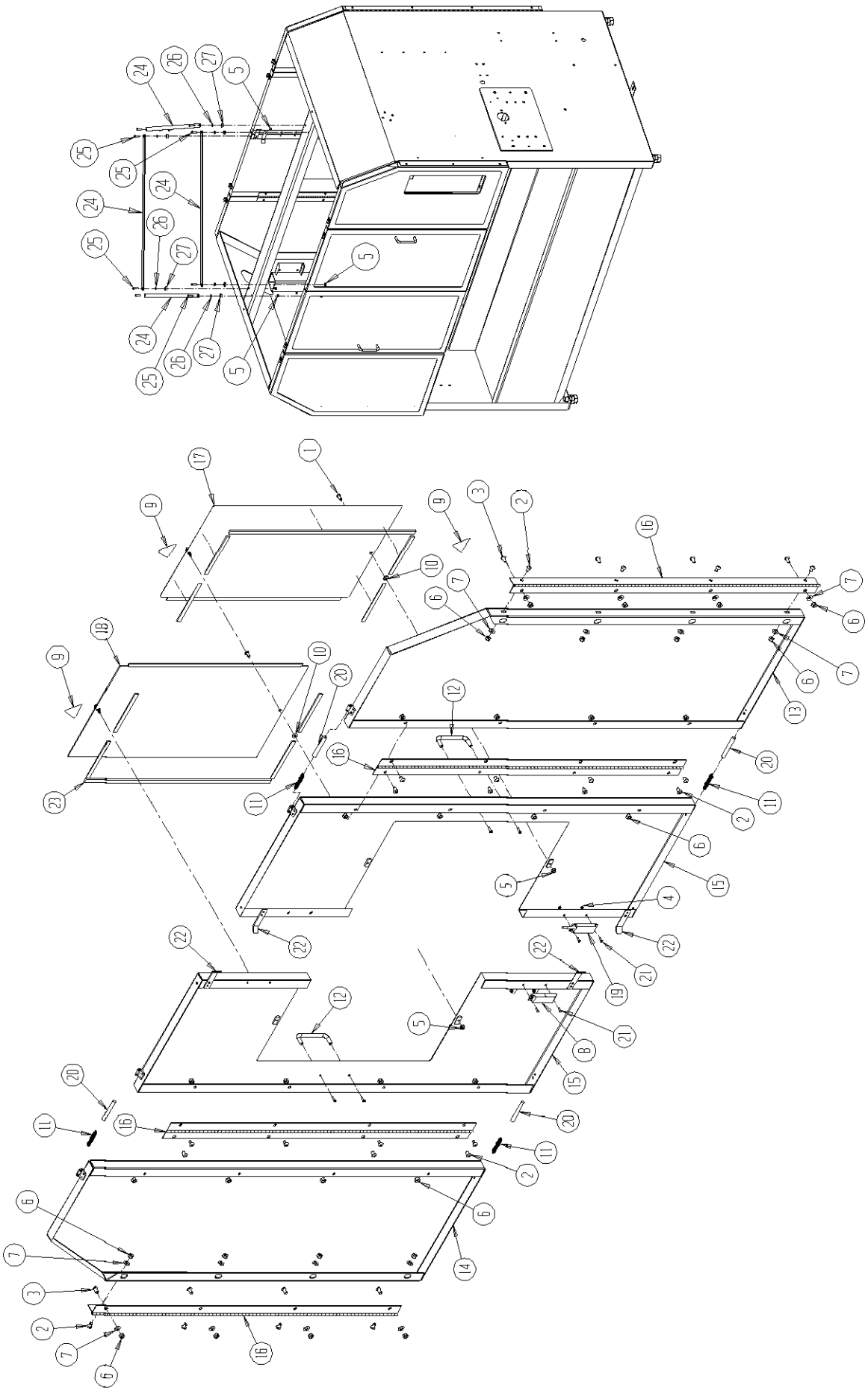

DIAGRAM NO.	PART NO.	DESCRIPTION
1	B251016	1/4-20 x 5/8" Long Button Head Socket Cap Screw
2	B310813	5/16-18 x 1/2" Long Button Head Socket Cap Screw
3	B311213	5/16-18 x 3/4" Long Button Head Socket Cap Screw
4	J167000	#8-32 Thin Locknut
5	J257000	1/4-20 Thin Locknut
6	J317000	5/16-18 Thin Locknut
7	K310001	5/16 SAE Flat Washer
8	3707647	Coded Door Safety Magnet
9	3708458	Warning Sharp Decal
10	3708691	Flat Washer
11	3708855	Extention Spring
12	3708857	Pull Handle
13	6059007	Rear Outside Door Weldment - RH
14	6059008	Rear Outside Door Weldment - LH
15	6059009	Raer Inside Door Weldment
16	6059025	Rear Door Hinge
17	6059026	Rear Walker Door Assembly - RH
18	6059011	Rear Walker Door Assembly - LH
19	6059040	Rear Door Safety Switch Assembly
20	6059044	Spring Cover Sleeve
21	3708820	#8-32 x 1/2" Long Button Head Safety Screw
22	6309038	Door Bracket
23	3708378	Foam Strip
24	6059006	Door Support Rod
25	B251616	1/4-20x1" Long Button Head Socket Cap Screw
26	3709623	Conical Washer
27	3859016	Spacer

6059533 CARRIAGE & TRAVERSE DRIVE ASSEMBLY

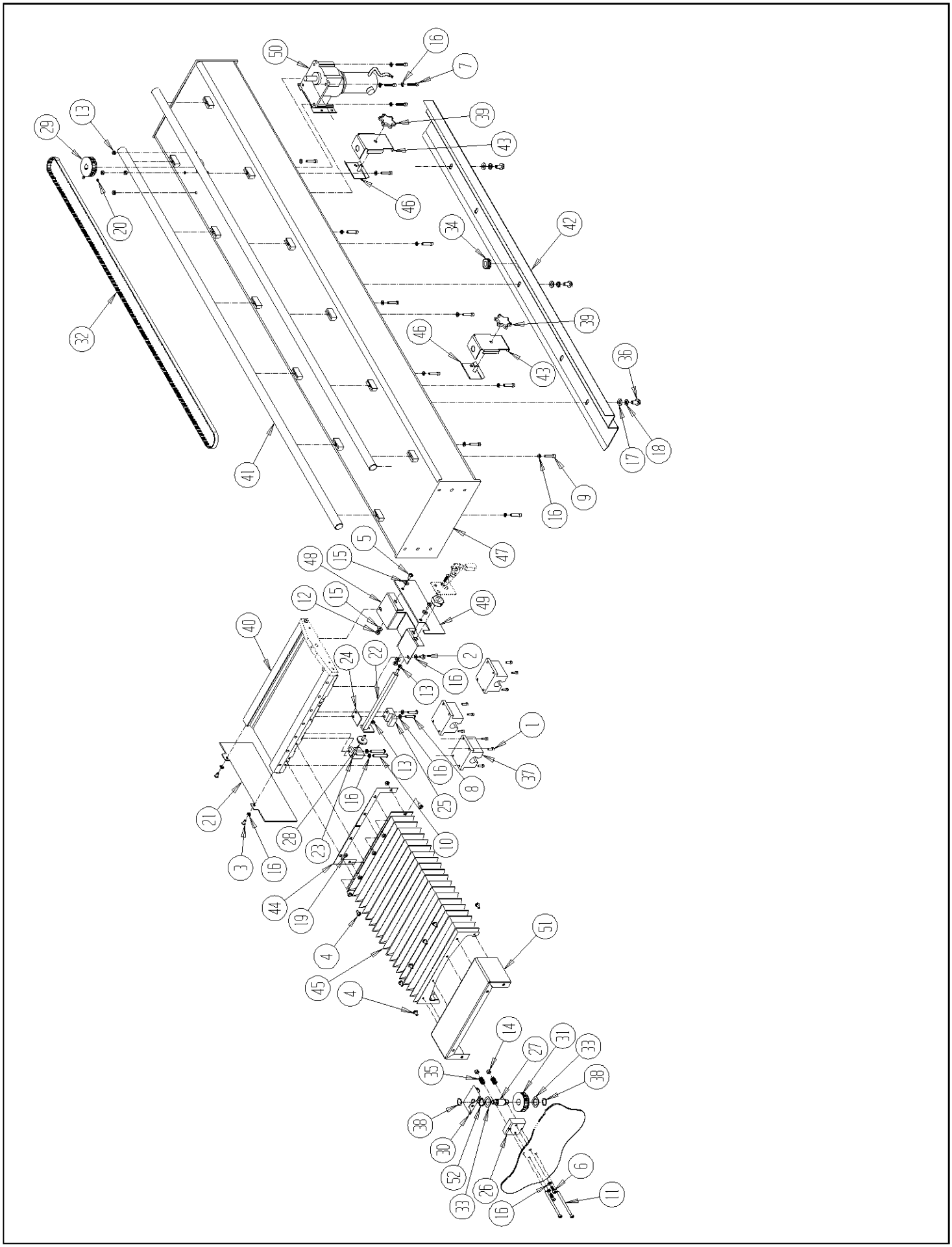

PARTS LIST (Continued) 6059533 CARRIAGE & TRAVERSE DRIVE ASSEMBLY

DIAGRAM NO.	PART NO.	PART NAME
1	B191011	#10-24 x 5/8" Long Socket Head Cap Screw
2	B250801	1/4-20 x1/2" Long Hex Head Cap Screw
3	B250816	1/4-20 x1/2" Long Button Head Socket Cap Screw
4	B250819	1/4-20 x 1/2" Long Truss Head Machine Screw
5	B251017	1/4-20 x 5/8" Long Round Head Machine Screw
6	B251211	1/4-20 x 3/4" Long Socket Head Cap Screw
7	B252011	1/4-20 x 1 1/4" Long Socket Head Cap Screw Full
8	B252016	1/4-20 x 1 1/4" Long Button Head Socket Cap Screw
9	B252211	1/4-20 x 1 3/8" Long Socket Head Cap Screw Full
10	B253216	1/4-20 x 2" Long Button Head Socket Cap Screw
11	B256411	1/4-20 x 4" Long Socket Head Cap Screw
12	J251000	1/4-20 Hex Nut
13	J252000	1/4-20 Hex Nut Jam
14	J257000	1/4-20 Locknut - Thin
15	K250001	1/4" Flat Washer
16	K251501	1/4" Split Lockwasher
17	K370001	3/8" Flat Washer
18	K371501	3/8" Split Lockwasher
19	R000552	1/4-20 Kep Nut
20	C250460	1/4-20 Socket Set Screw
21	18077	Front Bearing Dust Plate
22	18571	Traverse Clamp Assy
23	28187	Traverse Clamp Block
24	28188	Traverse Clamp Spacer
25	28189	Clamp Support Block
26	28192	Traverse Pulley Support
27	50309	Traverse Pulley Shaft
28	50310	Belt Clamp Tip
29	50354	Drive Pulley
30	50363	Traverse Pulley Guard
31	55553	Idler Pulley Assembly
32	80354	Cog Belt
33	80355	Thrust Washer
34	3708046	Rubber Grommet
35	3708658	Compression Spring
36	3708693	3/8-16 x 3/4" Long Hex Head Tapping Screw
37	3709044	Ball Bushing Bearing
38	3709331	Retaining Ring
39	3709613	5/16-18 Female Star Knob
40	6059086	Carriage Base
41	3969018	Carrier Shaft
42	6009068	Proximity Switch Support Rail
43	6009070	Proximity Switch Bracket
44	6009098	Bellows Retainer
45	6009140	Way Cover Bellows
46	6009572	Proximity Rail Clamp Weldment
47	6059057	Machined Main Base
48	6059058	Proximity Switch Sensing Bracket
49	6059059	Rubber Pad
50	6059062	Traverse Motor Assembly
51	6059536	Bellows End Bracket Weldment
52	3708419	Wave Spring .78 ID x 1.00 OD

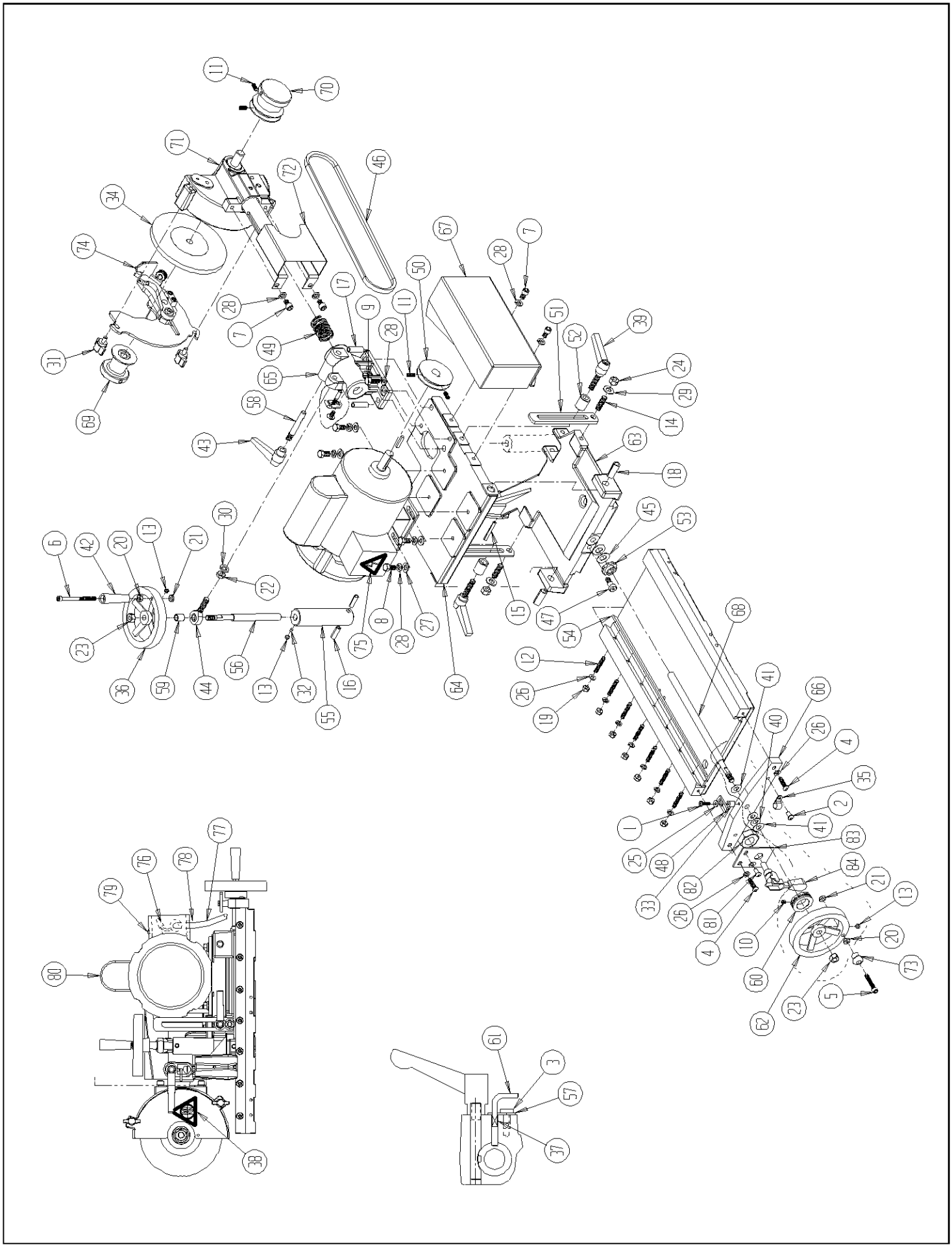
11
70
71
72
46
34
74
67
7
28
50
17
9
11
28
51
39
52
24
29
14
28
7
49
31
65
69
58
43
63
18
30
45
53
6
42
20
13
21
22
23
36
59
44
56
13
32
55
16
75
8
28
27
64
15
47
54
68
12
26
19
41
66
40
26
4
35
2
1
41
83
25
48
33
82
26
81
4
10
84
21
13
20
73
60
5
23
62
77
76
78
79
80
38
61
3
57
37

DIA. NO.	PART NO.	PART NAME
1	B191233	10-32x3/4 Pan Head Machine Screw
2	B190633	10-32x3/8 Pan Head Machine Screw
3	B250819	1/4-20x1/2 Truss Head Machine Screw
4	B251616	1/4-20x1 Button Head Cap Screw
5	B252411	1/4-20x1 1/2 Socket Head Cap Screw
6	B255011	1/4-20x3-1/8 Socket Head Cap Screw
7	B310811	5/16-18x1/2 Socket Head Cap Screw
8	B311001	5/16-18x5/8 Hex Head Cap Screw
9	B311401	5/16-18x7/8 Hex Head Cap Screw
10	C250420	1/4-20x1/4 Socket Setscrew Cup Pt.
11	C251020	1/4-20x5/8 Socket Setscrew Cup Pt.
12	C252420	1/4-20x1-1/2 Socket Setscrew Cup Pt.
13	C310420	5/16-18x1/4 Socket Setscrew Cup Pt.
14	C372020	3/8-16x1-1/4 Socket Setscrew Cup Pt.
15	H252802	.25 Dia x 1.75Lg Roll Pin
16	H311602	.31 Dia x 1 Lg Roll Pin
17	H372002	.38 Dia x 1.25 Lg Roll Pin
18	H502001	.50 Dia x 1.25 Lg Dowel Pin
19	J251000	1/4-20 Hex Nut
20	J252000	1/4-20 Hex Jam Nut
21	J257000	1/4-20 Thin Locknut
22	J371100	3/8-24 Hex Nut
23	J377000	3/8-16 Locknut Jam Nylon
24	J377100	3/8-16 Locknut Hex Nylok Full
25	K190001	#10 Flat Washer
26	K251501	1/4 Split Lock Washer
27	K310001	5/16 Flat Washer
28	K311501	5/16 Split Lock Washer
29	K370001	3/8 Flat Washer
30	K371501	3/8 Split Lock Washer
31	09394	2-Prong Knob
32	3579109	Nylon Plug 3/16 Dia.
33	3589081	Spacer .191 ID x .438 OD x .43 Lg
34	3700091	Grinding Wheel 6" Dia x .375" Wide
35	3707933	Cord Clip
36	3708148	Handwheel 4.5 Dia
37	3708213	.24 OD x .62 Lg Comp. Spring
38	3708461	RPM Warning Decal
39	3708561	3/8-16x1.56Lg Adj. Handle
40	3709062	Conical Washer
41	3709304	Thrust Washer
42	3709370	Handle
43	3709437	3/8-16 Adj Handle
44	3709463	Rod End Bearing
45	3709620	Conical Washer
46	3709764	V-Belt
47	3709809	.375 Dia x .38 Lg Shoulder Bolt
48	3809047	Clear Indicator
49	3889059	1.13 OD 2.0 Lg Compr. Spring
50	3889088	.62 Bore Pulley
51	3969027	Adjusting Arm
52	3969065	.406ID x 1Lg Steel Spacer
53	6009024	1/2-10 ACME Backlash Nut
54	6009025	Gib Plate
55	6009026	Tapped Pivot Sleeve
56	6009027	ACME Adjusting Shaft
57	6009029	Keeper Plate
58	6009030	Shaft Locking Stud
59	6009031	.386 ID x .56Lg Steel Spacer
60	6059082	Calibrated Ring
61	6009041	Angle Locking Pin
62	6009044	4.50 Dia Modified Handwheel
63	6009083	Grinding Head Slide Base
64	6009084	Grinding Head Pivot Base
65	6009088	Grinding Head Swivel Base
66	6009136	Feed Screw Guide
67	6009216	Rear Belt Guard
68	6009218	ACME Adjusting Shaft
69	6009272	Grinding Wheel Knob
70	6009277	V-Belt Pulley Knob
71	6009587	Grinding Head Arbor Assembly
72	6059023	Front Belt Guard
73	6059028	Spinning Knob
74	6059550	Index Finger Assembly
75	3708448	Electrical Warning Decal
76	3707155	Black Wire Nut w/Setscrew
77	6059053	Grind Motor Cord
78	3707976	3/8 Cable Connector
79	3709372	.50 Dia Hole Plug
80	3707690	1 HP Motor
81	B250816	1/4-20x1/2 Button Head Cap Screw
82	J627200	5/8-18 Thin Locknut
83	6009265	Traverse Belt Clamp Bracket
84	80335	Destaco Clamp

6059550 INDEX FINGER ASSEMBLY

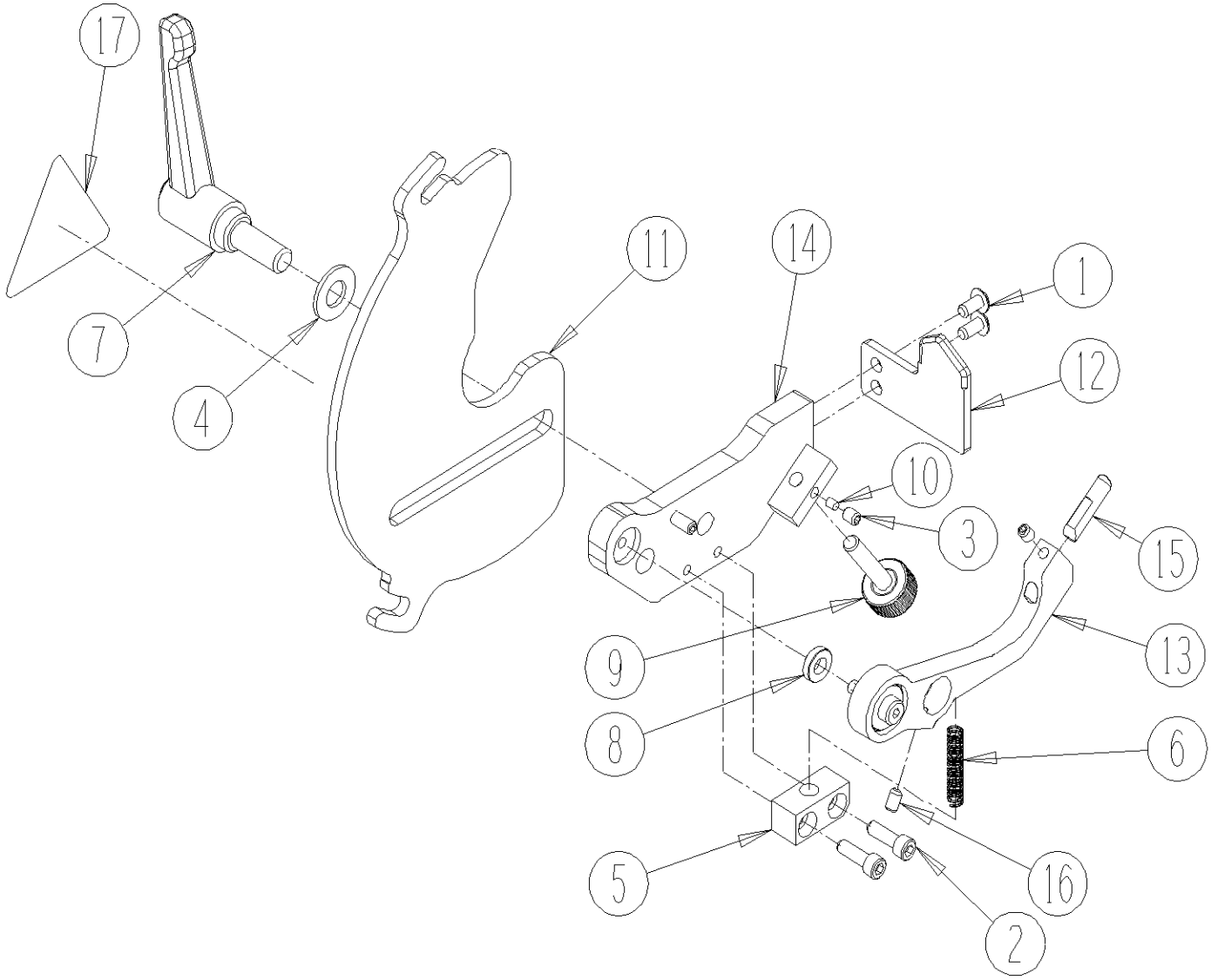

DIAGRAM NO.	PART NO.	DESCRIPTION
1	B190634	10-32 x 3/8 Long Button Head Socket Cap Screw
2	B191031	10-32 x 5/8 Long Socket Head Cap Screw
3	C190467	10-32 x 1/4 Long Socket Setscrew Nylock Cup Point
4	K310001	5/16 Flat Washer
5	55116	Index Finger Spring Block
6	3708919	Compression Spring
7	3708786	5/16-18 x 5/8" Long Adjustable Handle
8	3708833	Spacer
9	3708854	Knob Assembly
10	3709852	1/8" Diameter Nylon Ball
11	6009271	Grinding Wheel Guard & Finger Support
12	6009276	Fixed Finger
13	6059584	Index Finger Assembly
14	6059585	Finger Support Assembly
15	6509007	Index Stop Pin
16	C190667	10-32 x 3/8 Long Socket Setscrew Cup Point w/Patch
17	3708461	Decal - Warning 3600 RPM

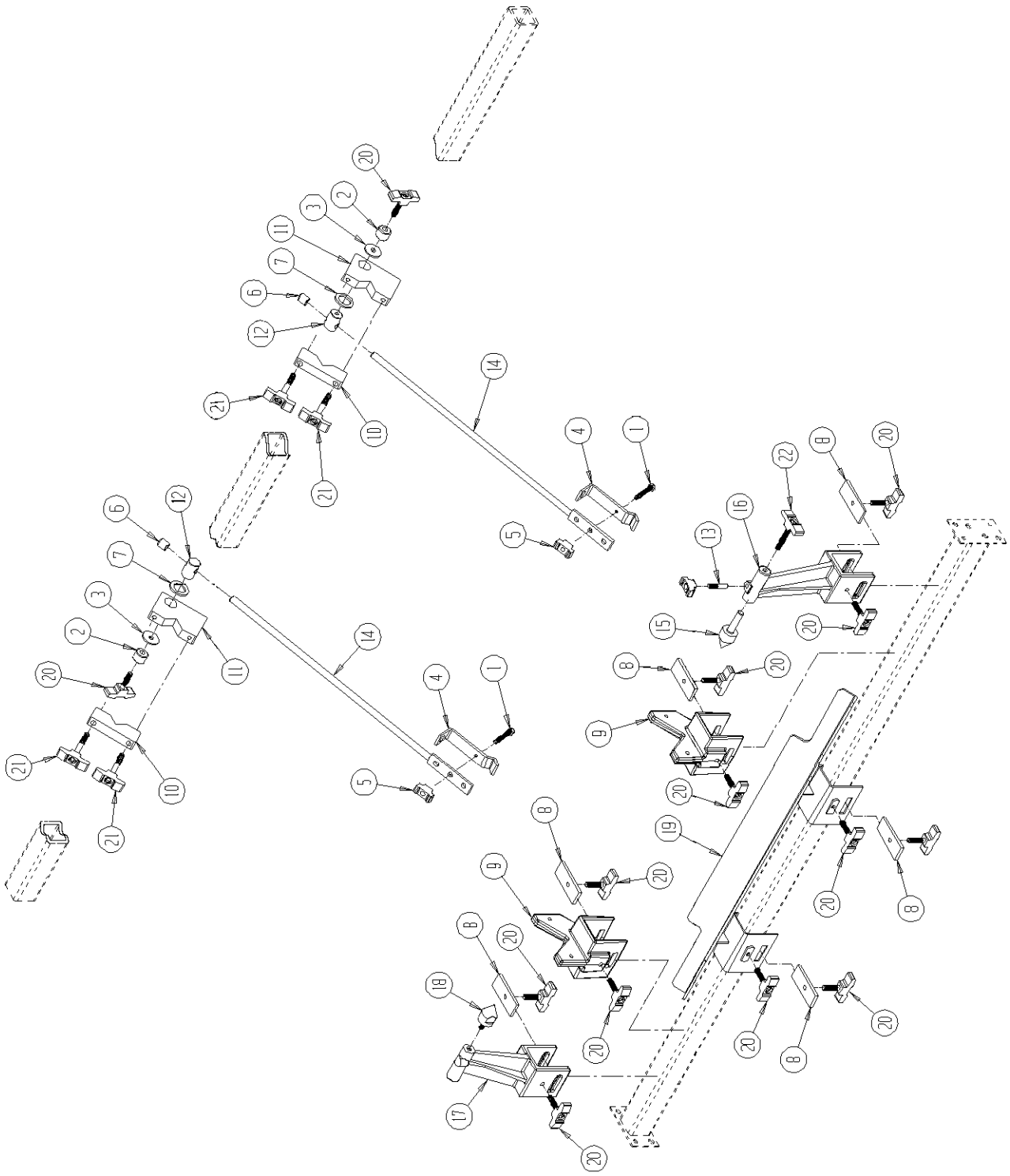
20
2
3
11
7
6
12
21
10
14
4
1
5
8
22
16
13
15
9
19
18
17

DIAGRAM NO.	PART NO.	DESCRIPTION
1	A313601	5/16-18 x 2 1/4" Long Hex Head Cap Screw
2	3109026	Spacer
3	3589106	Flat Washer 1.38 OD
4	3649078	Lip Clamp
5	3708262	T-Knob 5/16-18 Female
6	3709258	Bumper
7	3709808	Flat Washer 1.5 OD
8	3889066	Center Stand Lock
9	3969017	Mower Support V-Bracket
10	3969094	Top Clamp
11	3969095	Bottom Clamp
12	3969096	Clamp Bar
13	3969160	Stud Locking Shaft
14	3969547	Mower Clamp Weldment
15	6009020	Adjustable Center
16	6009221	Adjustable Center Stand
17	6009222	Fixed Center Stand
18	6009517	Fixed Center Assembly
19	6009545	Greensmower Mounting Bracket Weldment
20	6009555	T-Knob Assembly 1.5 Long
21	6009566	T-Knob Assembly 3.25 Long
22	6009577	T-Knob Assembly 2.25 Long

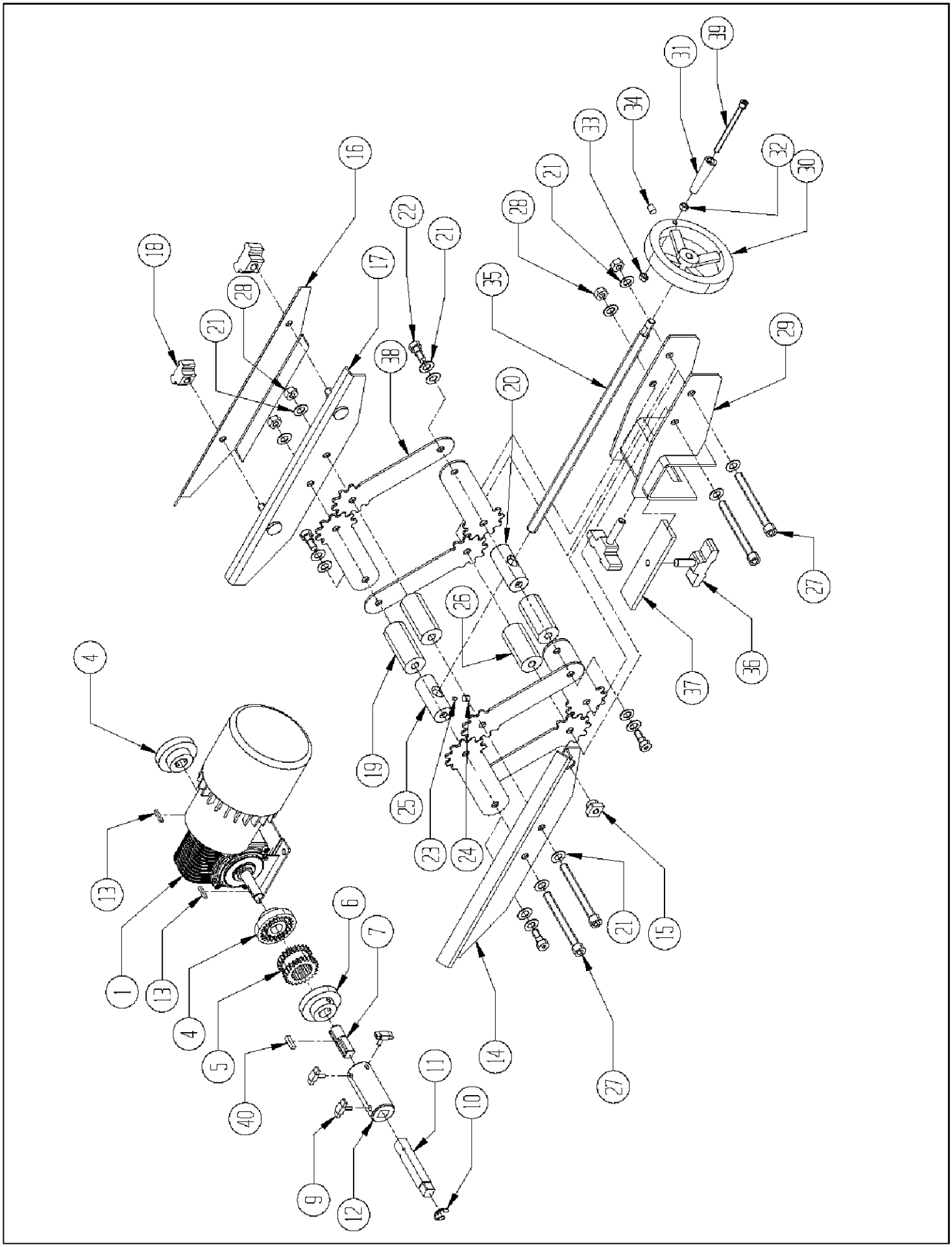
39
31
34
33
32
30
21
28
22
21
16
17
35
18
28
21
38
29
20
27
26
36
37
4
19
25
23
24
13
21
15
1
13
6
7
4
5
14
27
40
11
10
9
12

DIAGRAM NO.	PART NO.	DESCRIPTION
1	6329155	Motor Assembly , Electric 90 VDC .25 HP
4	3709586	Flange Coupler .50
5	3709585	Sleeve Coupler
6	3709584	Flange Coupler 5/8
7	6009217	Adapter, Drive Coupling
9	09394	T Knob Assembly 1/4-20 x .50 Lg.
10	3709073	Retaining Ring
11	6009051	Drive Adapter 1/2 Square
12	6009052	Adapter
13	R000376	Square Key 1/8 x 1/8 x 3/4
14	6009078	Bracket, Gearbox Slide
15	3707279	Strain Relief
16	6009079	Bracket, Gearbox Clamp
17	6009580	Bracket, Gearbox Slide Weldment
18	3708262	T-Knob
19	6009048	Spacer, Linkage 2.50 Lg.
20	6009047	Spacer, Linkage L.H. Thd.
21	3709062	Bellevill Washer 3/8"
22	3709809	Shoulder Screw
23	3709705	Nylon Plug
24	C310420	SSS 5/16-18 x 1/4" CP-PT
25	6009046	Spacer, Linkage R.H. Thd.
26	6009045	Spacer, Linkage 2.29 Lg.
27	B375611	SKHCS 3/8-16 x 3.50"
28	J377100	Locknut--Nylon 3/8-16 Full
29	6009575	Linkage--Support Bracket Weldment
30	3708148	Handwheel, 4.50 Diameter
31	3709370	Handle, Spinning
32	J252000	1/4-20 Hex Jam Nut
33	J257000	1/4-20 Nylok Nut
34	C310620	SKSS, SP-PT, 5/16-18 x 3/8"
35	6009076	Rod, Double Thread
36	6009555	Knob Assembly
37	3889066	Center Stand Lock
38	6009067	Linkage, Geared
39	B255011	SHCS 1/4-20 x 3-1/8"
40	R000377	Square Key 3/16 x 3/4"

6009527 REEL SET UP GAUGE ASSEMBLY

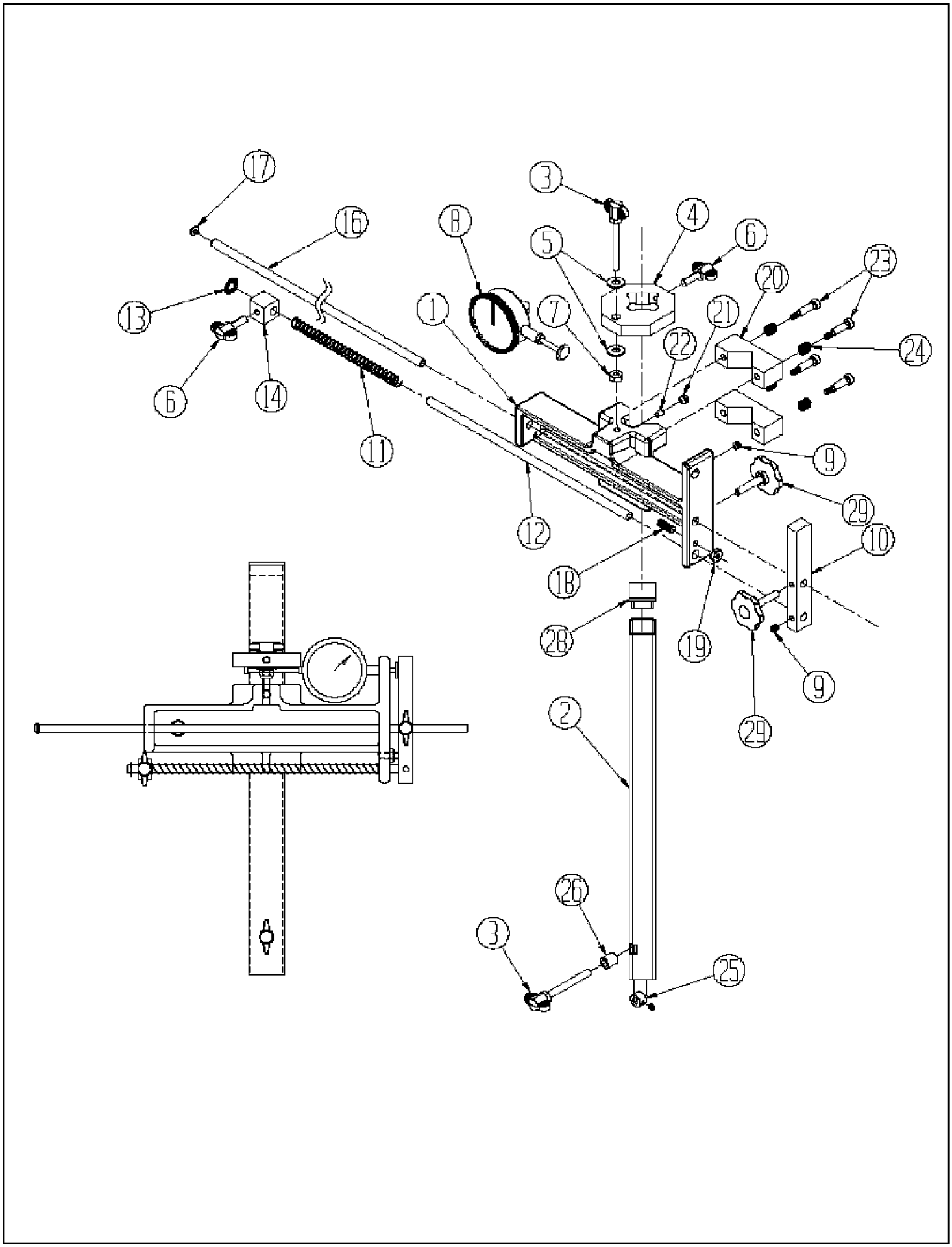

DIAGRAM NO.	PART NO.	DESCRIPTION
1	6009089	Slide, Setup Gage
2	18003	Tube, Gage Slide
3	6009597	Tee Knob Assembly 1.75 lg.
4	6009049	Block, Adjust Slide
5	K250001	1/4 Flat SAE Washer
6	3706033	T-Knob Assembly 1/4-20 x .79 Long
7	J257100	Locknut--Nylon 1/4-20 Full
8	3579123	Dial Indicator
9	C250420	SKSS, CP-PT, 1/4-20 x 1/4"
10	6009054	Bar, Indicator Stop
11	3709278	Spring--Compression
12	3969109	Spring Guide Rod
13	3709336	Push on Ring
14	3109022	Saddle Stop
16	6009055	Rod, Gage Alignment
17	3708540	Domed Anvil 3/8
18	C251220	SKSS, CP-PT, 1/4-20 x 3/4"
19	J252000	1/4-20 Jam Nut
20	6009050	Clamp, Spring Loaded
21	C310420	SSS 5/16-18 x 1/4" CP-PT
22	3579109	Nylon Plug
23	3708453	Shoulder Bolt 1/4" D x 3/4"
24	3708175	Spring
25	3708674	Set Collar 1/4 with SSS
26	6009057	Square
28	3708154	Plug--Spacer
29	6009596	Tee Knob Assembly, Nylon

6059541 CONTROL PANEL ASSEMBLY

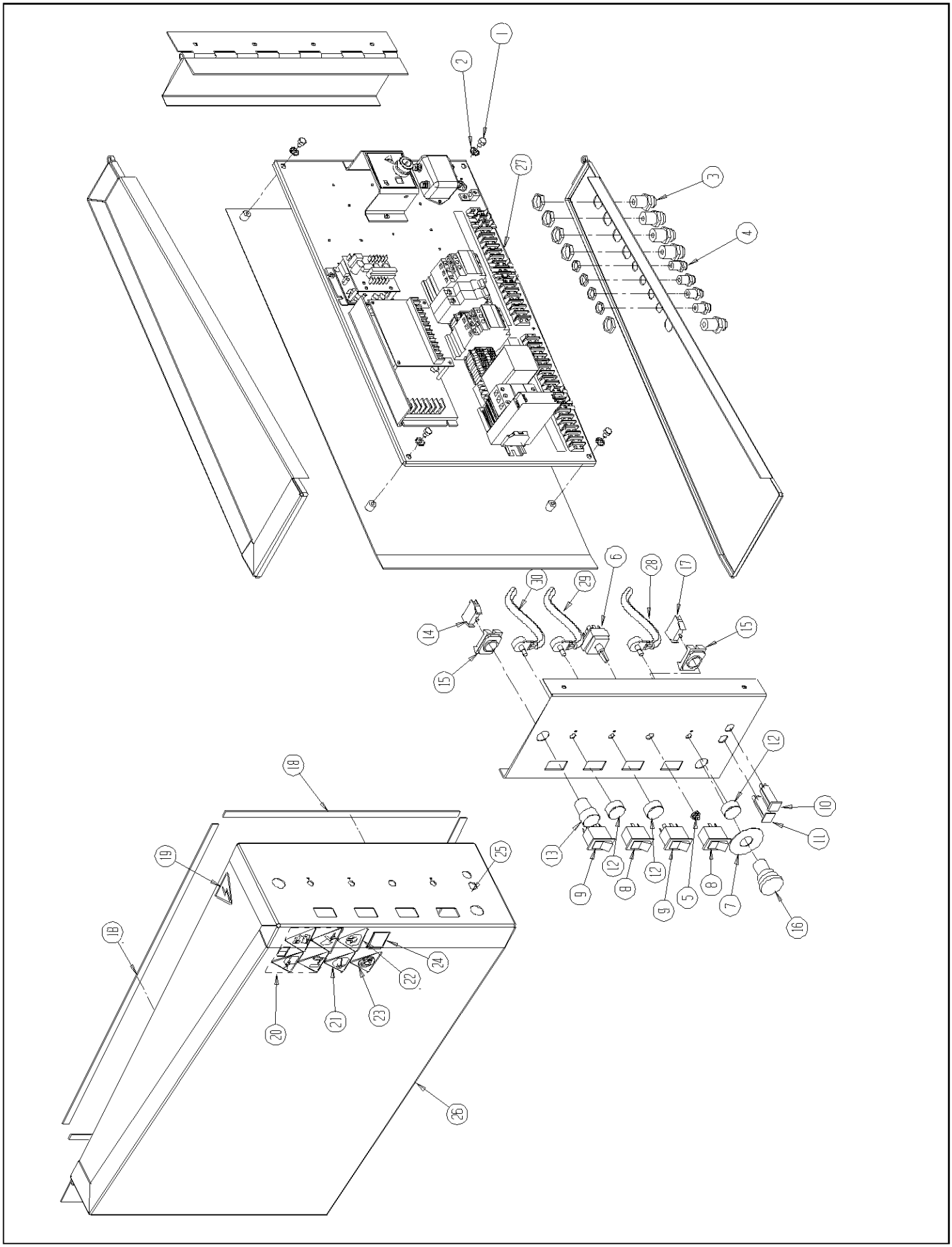

DIAGRAM NO.	PART NO.	DESCRIPTION
1	D250800	1/4-20 x 1/2" Long Thread Cutting Screw
2	R000536	1/4 Internal Teeth Lock Washer
3	3707009	Strain Relief - Large
4	3707029	Strain Relief - Small
5	3707075	Toggle Switch Boot
6	3707080	Toggle Switch
7	3707342	Yellow E-Stop Ring
8	3707367	Rocker Switch DPST
9	3707429	Rocker Switch DPDT
10	3707443	4-Amp Circuit Breaker
11	3707543	12-Amp Circuit Breaker
12	3707446	Potentiomoter Knob
13	3707564	Green Start Pushbutton
14	3707565	Normal Open Contact Block
15	3707566	Mounting Switch Latch
16	3707567	Push-Pull Red E-Stop
17	3707568	Normal Closed Contactt Block
18	3708378	Foam Strip
19	3708448	Electrical Warning Decal
20	3708703	Warning Decals (5)
21	3708605	Respirator Warning Decal
22	3708606	Hear Protection Decal
23	3708612	No Fuel Decal
24	3708872	Patent Decal
25	3708862	Control Panel Decal
26	6009586	Electrical Box Weldment
27	6059546	Electrical Panel Sub-Assembly
28	6059050	Traverse Potentiometer
29	6509447	Relief Torque Potentiometer
30	6509446	Spin Speed Potentiometer
--	3707616	Wire Harness - Spin Drive (Not Shown)
--	3707617	Wire Harness - Safety Monitor (Not Shown)
--	3707772	Wire Harness - Common (Not Shown)
--	6059048	Wire Harness - Controls (Not Shown)
--	6059054	Cord - Main Power (Not Shown)
--	6059083	Cord - Light Receptacle (Not Shown)
--	6059078	Prox Cord - Traverse LH [Service] (Not Shown)
--	6059079	Prox Cord - Traverse RH [Service] (Not Shown)
--	3707601	Prox Head [Service] (Not Shown)
--	6059080	Wire Harness - Control Panel (Not Shown)
--	3707224	Cable Tie Mount (Not Shown)
--	3707225	Cable Tie 6.5 Long x .18 Wide (Not Shown)
--	3707255	Cable Tie 4.0 LOng x .10 Wide (Not Shown)

PARTS LIST 3707774 & 6059546 CONTROL PANEL SUB-ASSEMBLY

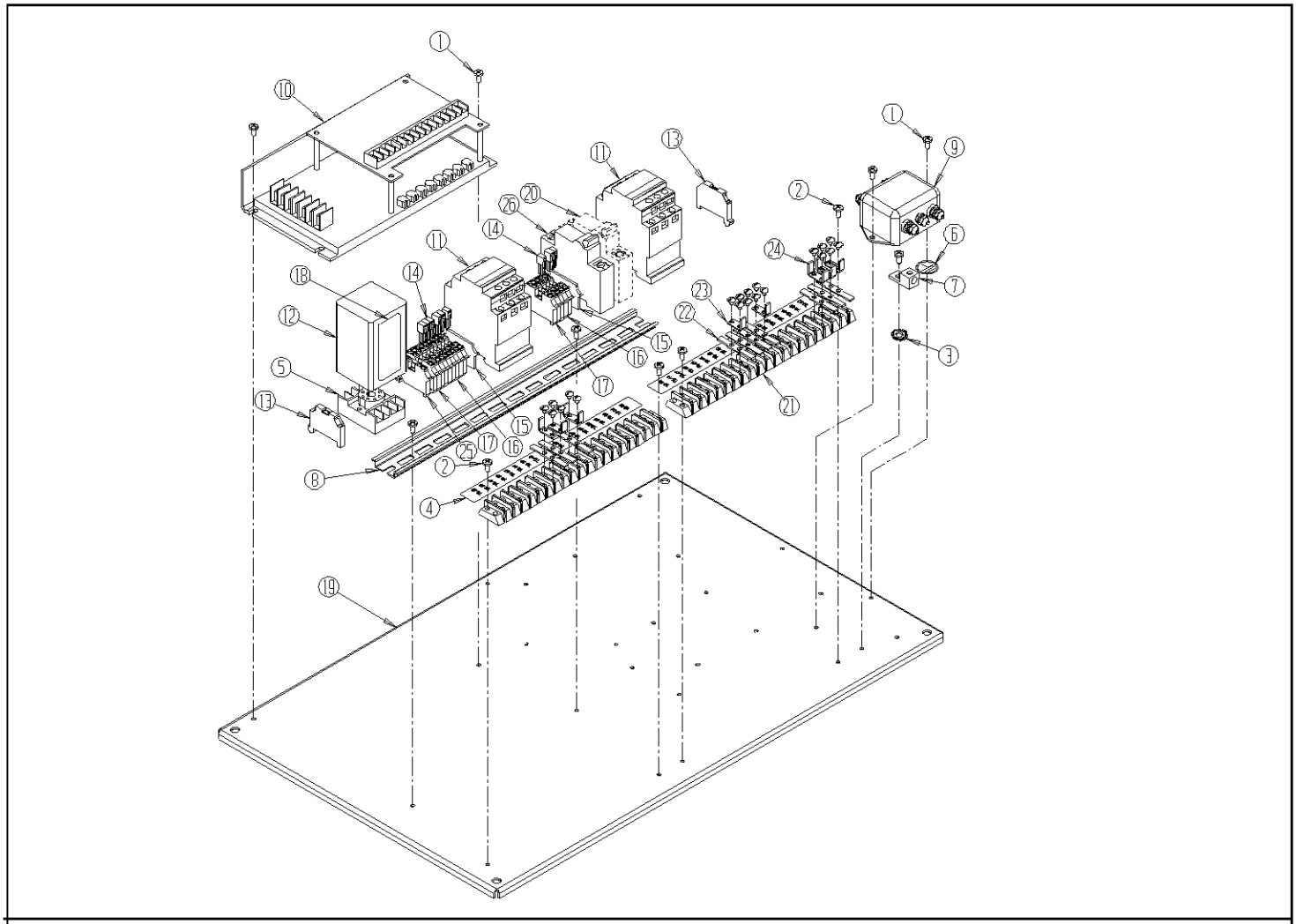

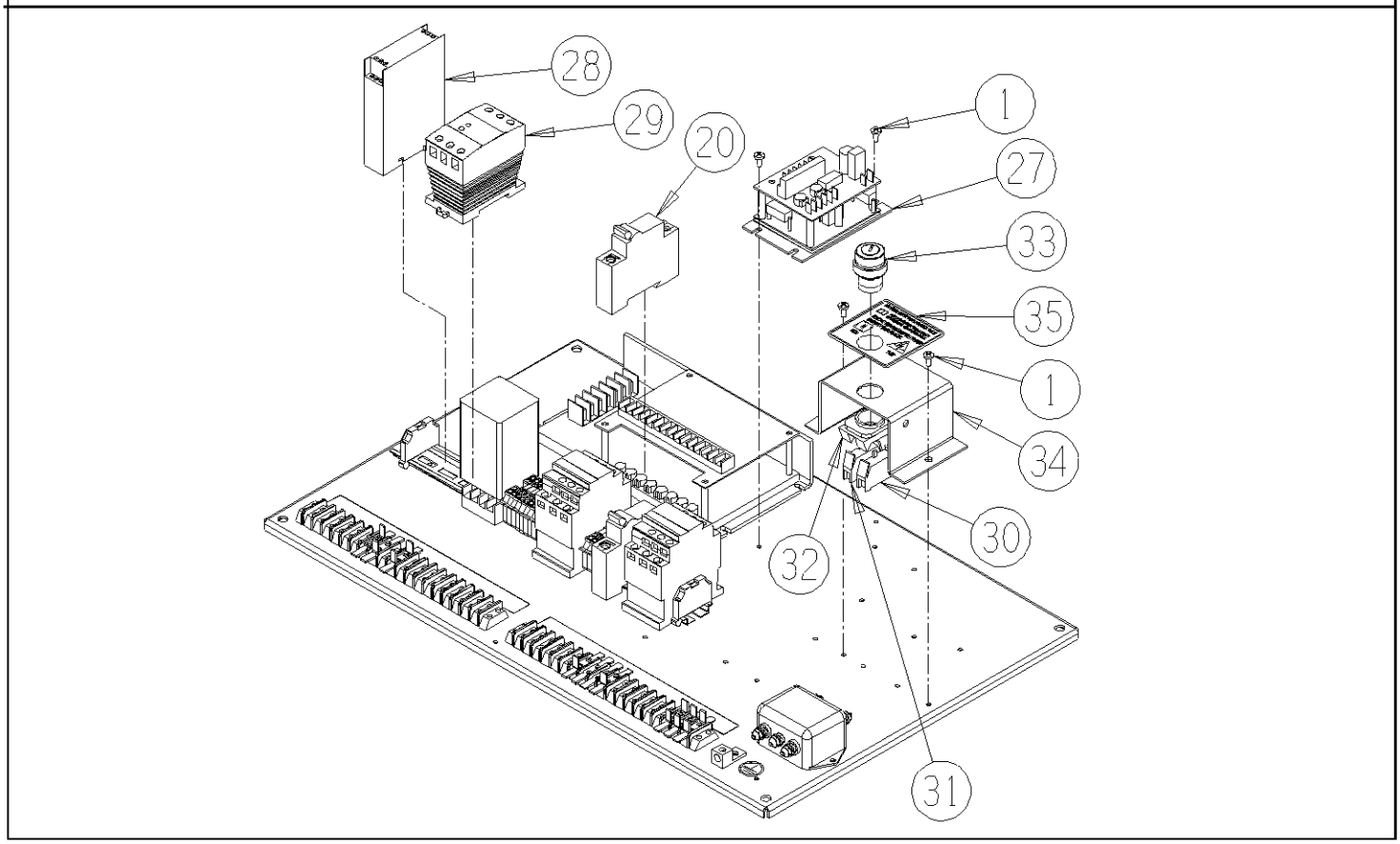

DIAGRAM NUMBER	PART NUMBER	DESCRIPTION
1	D160666	Pan Head Self-Tapping Screw #8 x 3/8 Long
2	D161266	Pan Head Self-Tapping Screw #8 x 3/4 Long
3	R000480	#8 Lockwasher
4	55223	Terminal Strip Decal
5	3707073	8-Pin socket
6	3707163	Primary Ground Decal
7	3707164	Primary Ground Lug
8	3707378	14" Din Rail
9	3707764	Power Line Filter 20 Amp
10	3707550	Traverse Control Board
11	3707556	Magnetic Starter
12	3707688	High/Low Voltage Sensor Relay
13	3707625	Screwless Terminal Bock End Stop
14	3707626	Terminal Block Jumper
15	3707627	Terminal Block End Plate
16	3707628	2-Conductor Terminal Block - Grey
17	3707629	2-Conductor Terminal Block - Blue
18	3708920	Low Voltage Warning Decal
19	6009270	Electrical Sub Panel
20	3707589	15-Amp Circuit Breaker
21	3707706	19 Pole Terminal Strip
22	3707707	Double Spade Terminal
23	3707709	Single Spade Terminal 90°
24	3707708	Double Spade Terminal 90°
25	3707624	Ground Terminal Block
26	3707779	6 Amp Circuit Breaker
27	3707524	Spin/Relief Control Board
28	3707328	Door Safety Switch Monitor
29	3707333	24 VDC Power Supply
30	3707565	Contact Block - Normally Open NO
31	3707568	Contact Block - Normally Closed NC
32	3707566	Switch Mounting Latch
33	3707592	Keyed Position Switch
34	6059046	Key Switch Mount Bracket
35	6059049	Key Switch Position Decal

6059526 WINCH & BOOM ASSEMBLY

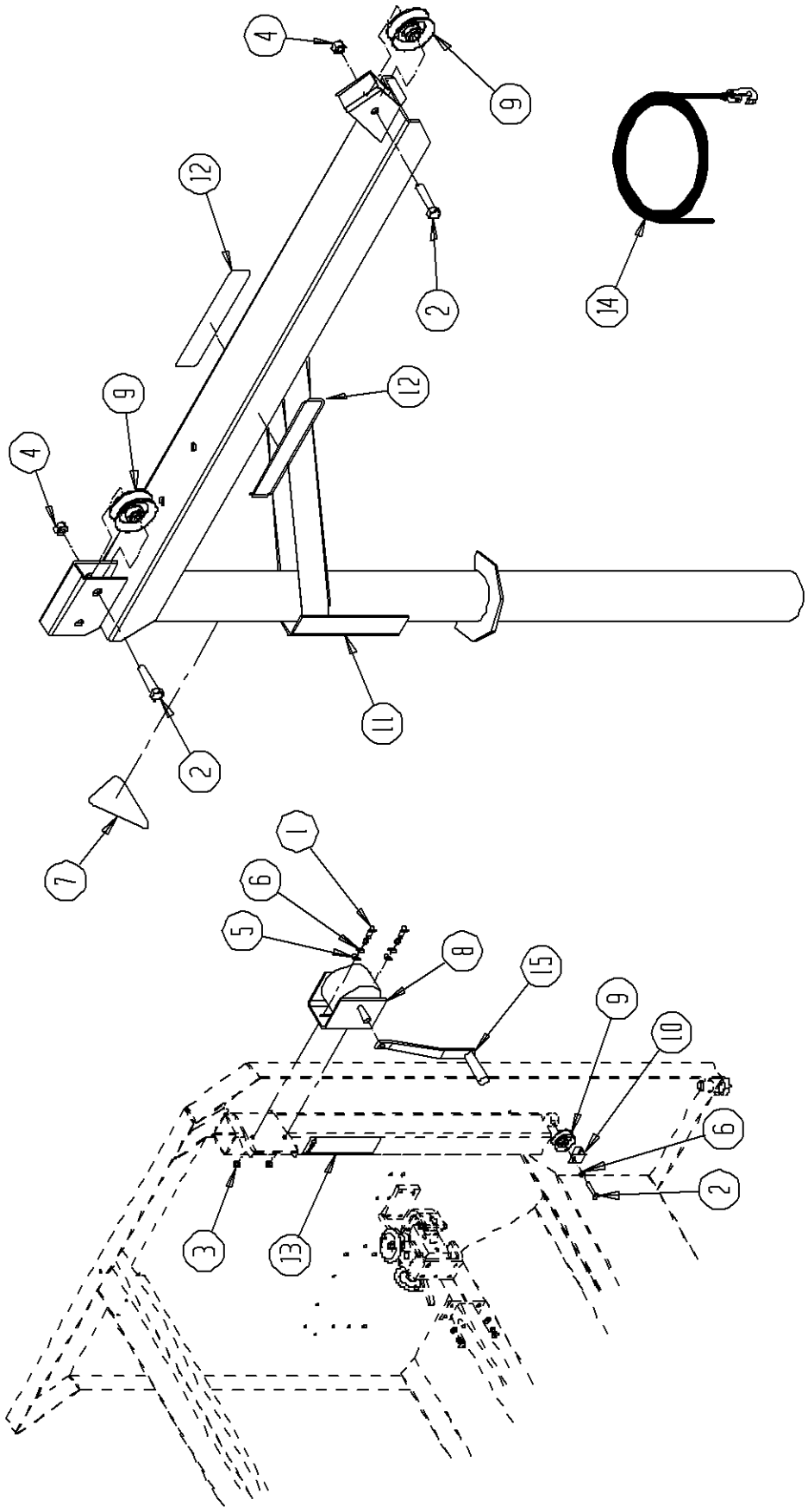

DIAGRAM NO.	PART NO.	DESCRIPTION
1	B371601	3/8-16 x 1" Long Hex Head Cap Screw
2	B372801	3/8-16 x 1 3/4 Hex Head Cap Screw
3	J371000	3/8-16 Hex Nut
4	J377100	3/8-16 Hex Nlylok Locknut
5	K370001	3/8 Flat Washer
6	K371501	3/8 Split Lockwasher
7	3708456	Boom Capacity Warning Decal
8	3708578	Winch With 11" Handle
9	3709795	Pulley
10	6059003	Pulley Guard Bracket
11	6059527	Boom Weldment
12	6309036	Boom Capacity Decal
13	6309037	Winch Warning Decal
14	3709407	Hook & Cable Assembly
15	3708647	Handle 7"

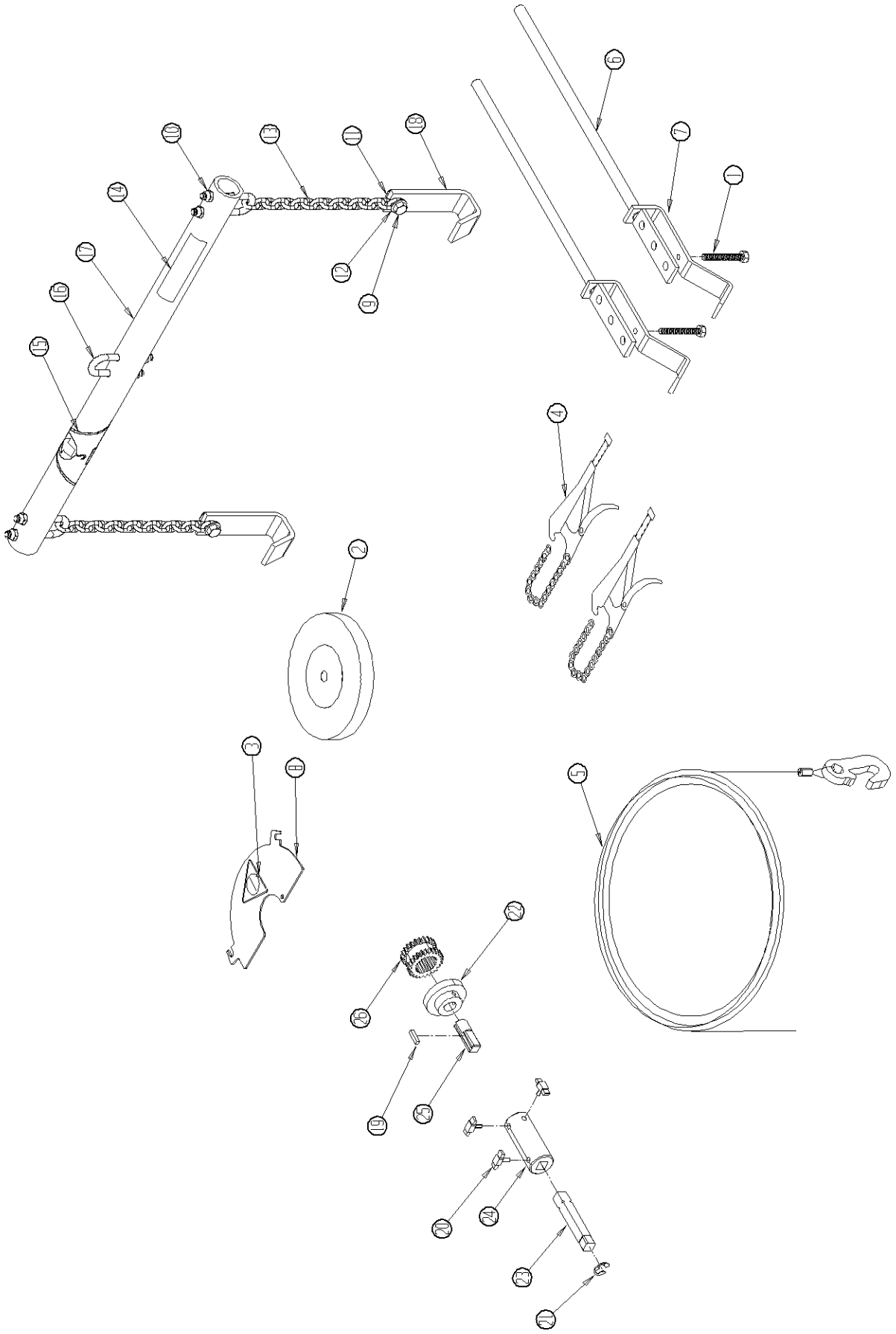

DIAGRAM NO.	PART NO.	DESCRIPTION
1	A313601	5/16-18 x 2.25 Hex Head Cap Screw - Full Thread
2	3700095	Grinding Wheel - Straight 6" x 1" x .502 Bore
3	3708461	Decal - Warning 3600 RPM
4	3709298	Chain Clamp - Vice Grip
5	3709407	Hook and Cable Assembly
6	3889531	Mower Holder Clamp
7	3969162	Clamp Lip
8	6009037	Guard - Wheel
9	B372011	3/8-16 x 1-1/4 Socket Head Cap Screw
10	J317100	5/16-18 Locknut - Full Height
11	J377100	3/8-16 Locknut - Full Height
12	3599028	Flatwasher 1.00 OD x .375 ID x .188 T
13	3649005	Chain
14	3708456	Decal - Warning Load
15	3708856	Decal - Spreader Bar
16	3709316	U Bolt 5/16-18 x 3
17	6009011	Spreader
18	6009102	Grab Hook
19	R000377	Square Key 3/16 x .75 Long
20	09394	Knob - 2 Prong 1/4-20 x 1/2 Male
21	3709073	Retaining Ring - External
22	3709584	Flange Coupler
23	6009051	Drive Adapter 1/2" Square
24	6009052	Adapter
25	6009217	Adapter - Drive Coupling
26	3709585	Sleeve Coupler

6054546 WIRING DIAGRAM

CB1 - CIRCUIT BREAKER 1
CB2 - CIRCUIT BREAKER 2
DSS1 - FRONT DOOR SAFETY SWITCH
DSS2 - REAR DOOR SAFETY SWITCH
ESS - EMERGENCY STOP SWITCH
FTR - LINE FILTER
GMS - GRINDING MOTOR SWITCH
KSS - KEY SELECTOR SWITCH
LVR - LOW VOLTAGE RELAY
MAG - MAGNETIC STARTER
MCB - MAIN CIRCUIT BREAKER
PWR - 24V POWER SUPPLY
PX1 - RIGHT PROXIMITY SWITCH
PX2 - LEFT PROXIMITY SWITCH
REL - GRINDING MOTOR RELAY
RTP - RELIEF TORQUE POT
SCB - SECONDARY CIRCUIT BREAKER
SDC - SPIN DRIVE CONTROL
SMS - SPIN MOTOR SWITCH
SRS - SPIN ROTATION SWITCH
SSM - SAFETY SWITCH MONITOR
SSP - SPIN SPEED POT
SSS - SYSTEM START SWITCH
STS - SPIN/TORQUE SELCTOR SWITCH
TB1 - TERMINAL STRIP 1
TB2 - TERMINAL STRIP 2
TBG - TERMINAL BLOCK GREY
TBW - TERMINAL BLOCK BLUE
TDC - TRAVERSE DRIVE CONTROL
TMS - TRAVERSE MOTOR SWITCH
TSP - TRAVERSE SPEED POT

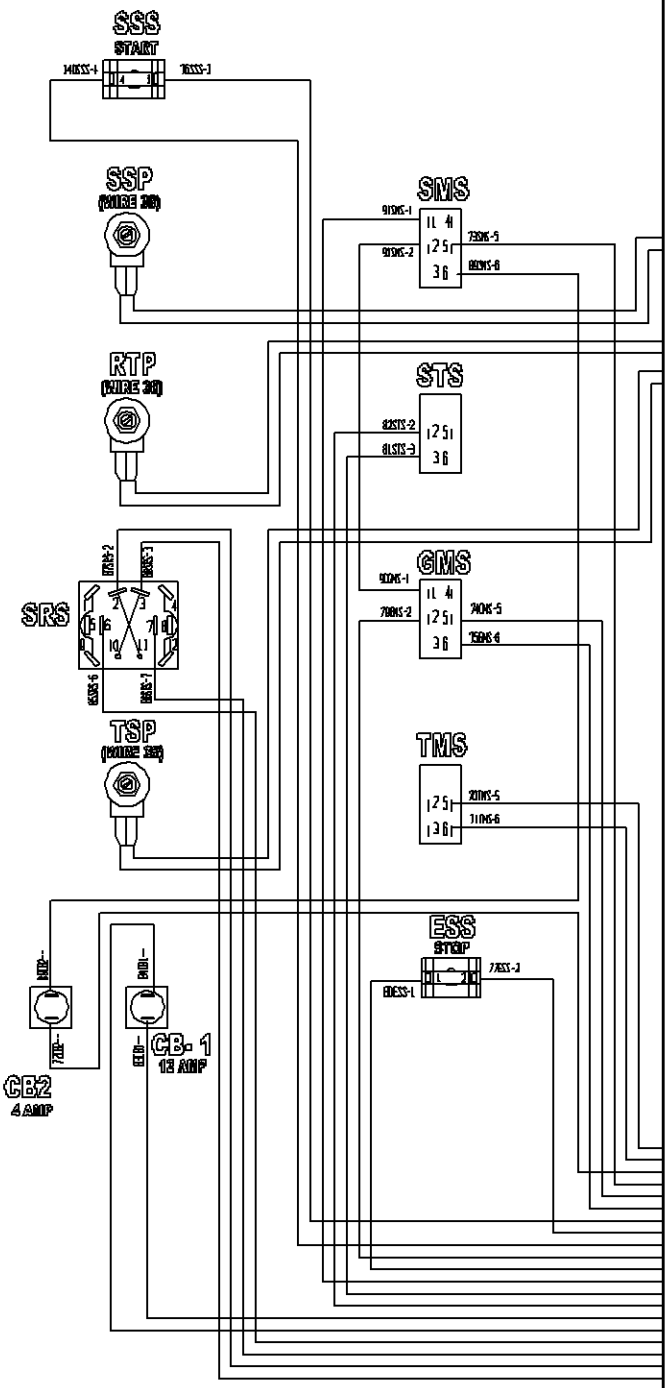

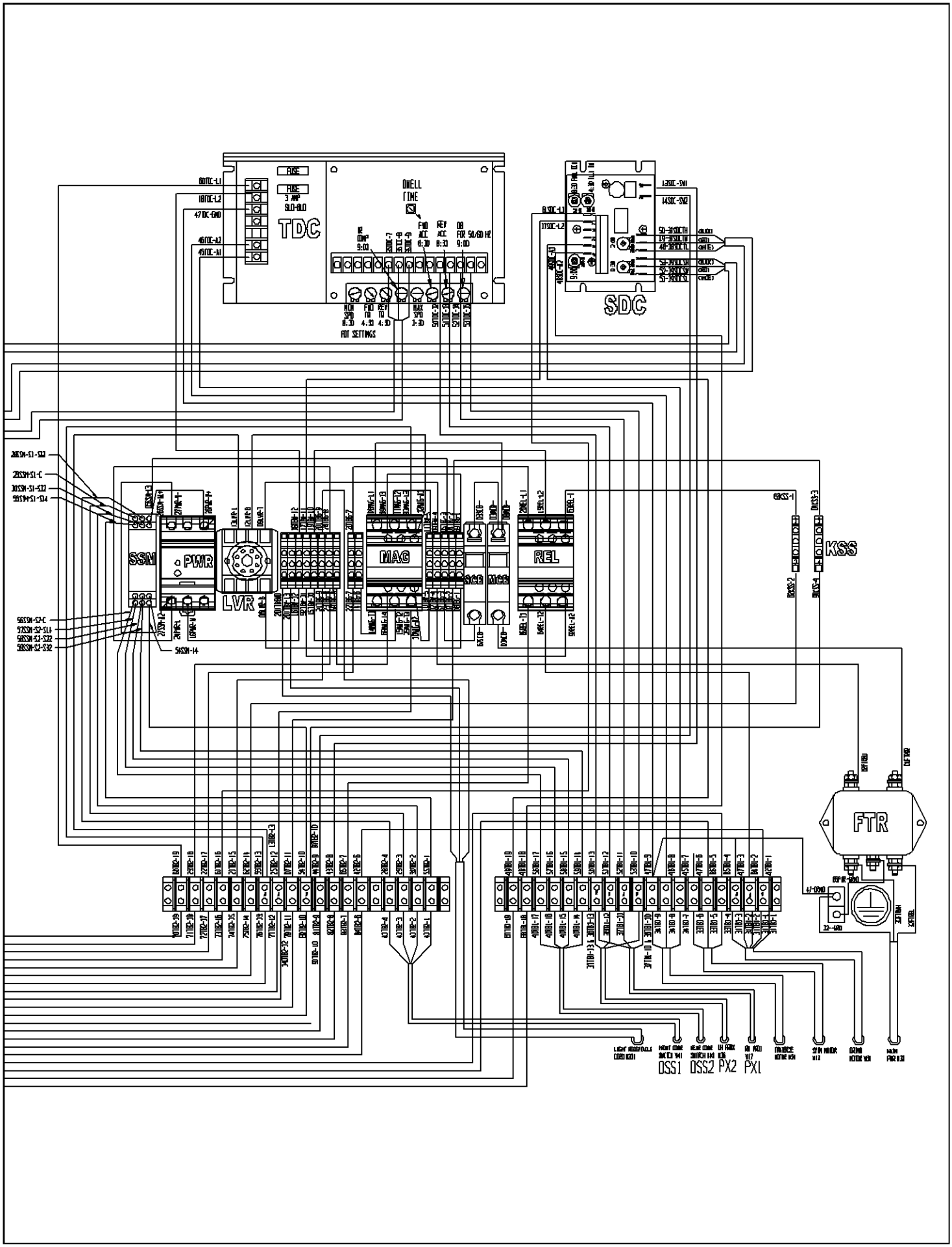
TDC
SDC
SSM
PWR
LVR
MAG
REL
KSS
FTR
DSS1
DSS2
PX2
PX1

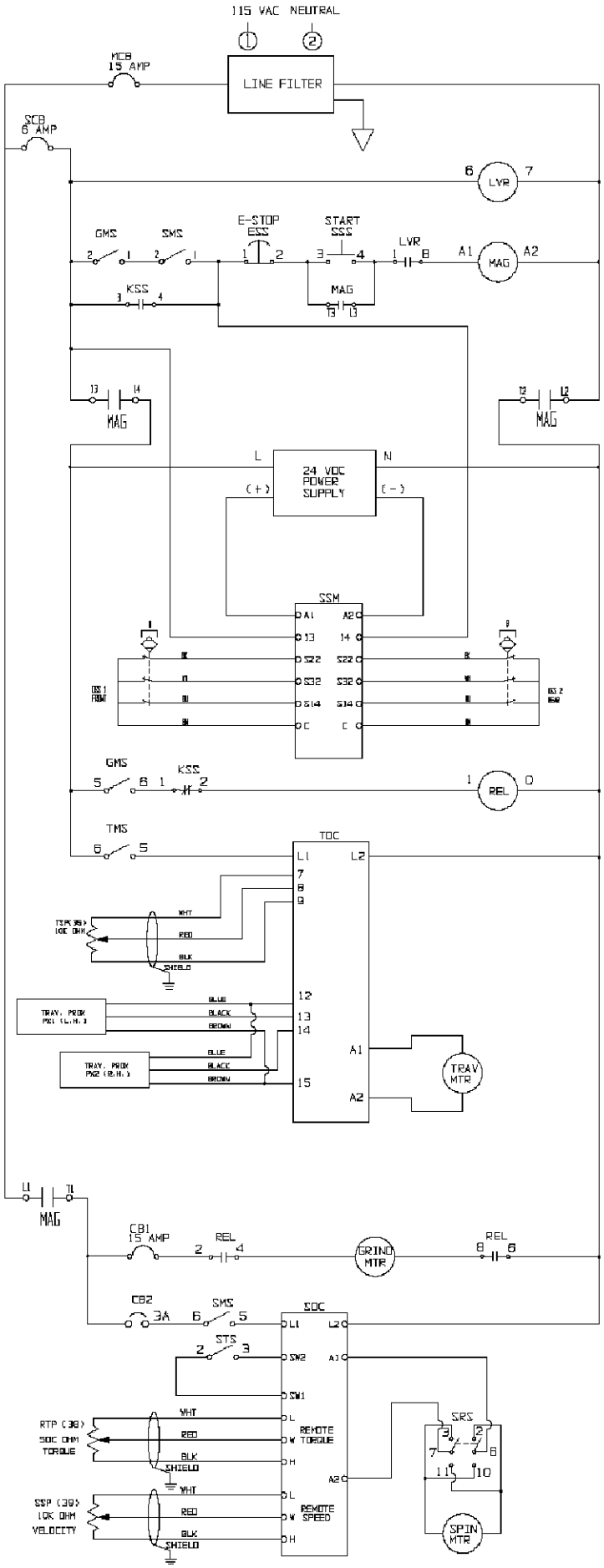

CB1-CIRCUIT BREAKER 1
CB2-CIRCUIT BREAKER 2
DSS1-FRONT DOOR SAFETY SWITCH
DSS2-REAR DOOR SAFETY SWITCH
ESS-EMERGENCY STOP SWITCH
GMS-GRINDING MOTOR SWITCH
LVR-LOW VOLTAGE RELAY
MCB-MAIN CIRCUIT BREAKER
MAG-MAGNETIC STARTER
MSS-MODE SELCTOR SWITCH
PX1-LEFT PROXIMITY SWITCH
PX2-RIGHT PROXIMITY SWITCH
REL-GRINDING MOTOR RELAY
RTP-RELIEF TORQUE POT
SCB-SECONDARY CIRCUIT BREAKER
SMS-SPIN MOTOR SWITCH
SRS-SPIN ROTATION SWITCH
SSM-SAFETY SWITCH MONITOR
SSP-SPIN SPEED POT
SSS-SYSTEM START SWITCH
STS-SPIN/TORQUE SELCTOR SWITCH
TSP-TRAVERSE SPEED POT
TOC-TRAVERSE DRIVE CONTROL